OI5004

Diffuse reflection sensor

OIT-FNKG

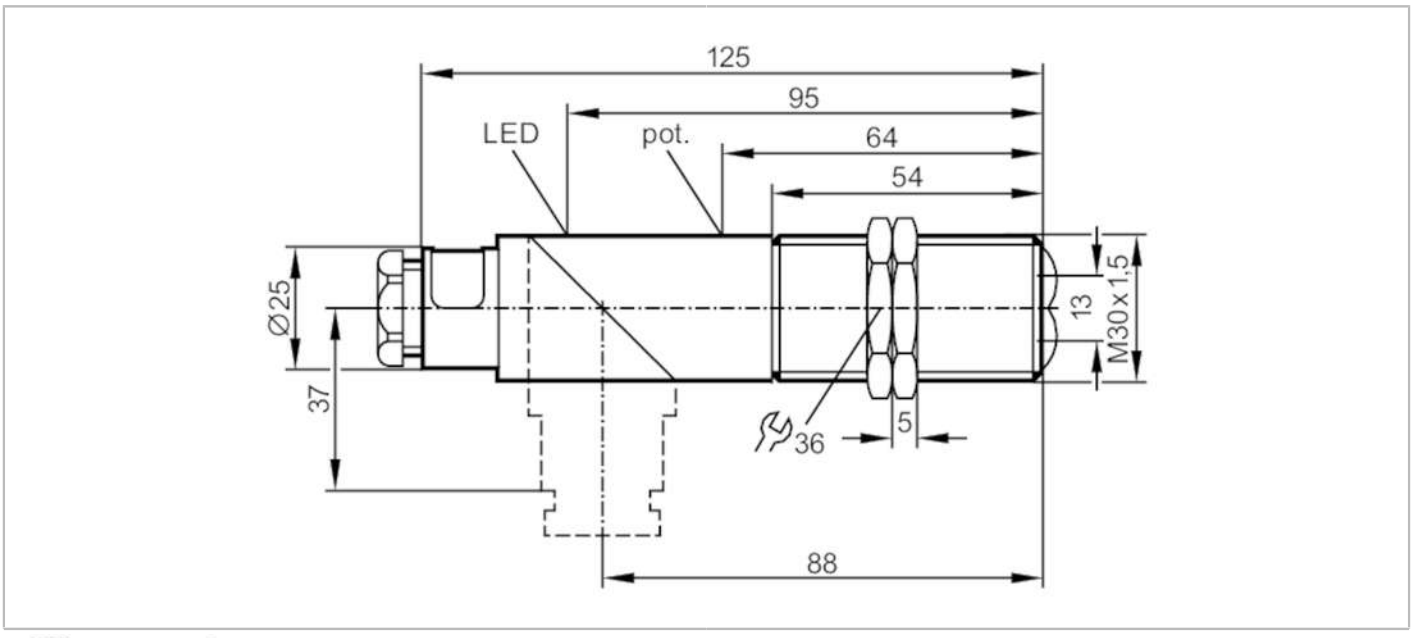

Product characteristics		
Type of light		infrared light
Housing		threaded type
Application		
Function principle		Diffuse reflection sensor
Electrical data		
Operating voltage	[V]	10...55 DC
Current consumption	[mA]	30; ((24 V))
Protection class		II
Reverse polarity protection		yes
Type of light		infrared light
Wave length	[nm]	880
Outputs		
Electrical design		NPN
Output function		light-on/dark-on mode; (programmable)
Max. voltage drop switching output DC	[V]	2.5
Permanent current rating of switching output DC	[mA]	250
Switching frequency DC	[Hz]	100
Short-circuit protection		yes
Type of short-circuit protection		pulsed
Overload protection		yes
Detection zone		
Range	[mm]	3...700; (white paper 200 x 200 mm)
Range adjustable		yes

OI5004

Diffuse reflection sensor

OIT-FNKG

Max. light spot diameter	[mm]	122	
Light spot dimensions refer to		at maximum range	
Operating conditions			
Ambient temperature	[°C]	-25...80	
Protection		IP 65	
Tests / approvals			
EMC		EN 60947-5-2	
MTTF	[years]	659	
Mechanical data			
Weight	[g]	125.5	
Housing		threaded type	
Dimensions	[mm]	M30 x 1.5 / L = 125	
Thread designation		M30 x 1.5	
Materials		PBT; PPO modified	
Lens material		PMMA	
Displays / operating elements			
Display		switching status	1 x LED, yellow
Accessories			
Items supplied		lock nuts: 2	
		screwdrivers	
Remarks			
Pack quantity		1 pcs.	
Electrical connection			

terminals: ...1.5 mm²; Cable sheath: Ø 7...13 mm; Cable gland: M20 X 1.5

Connection

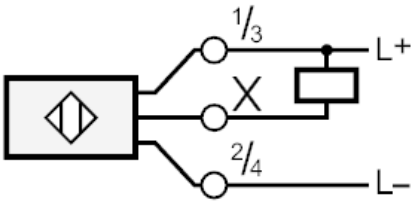

OI5004

Diffuse reflection sensor

OIT-FNKG

Diagrams and graphs

excess gain graph

