Your Expert Partner for **Human Machine Interfaces**

Actuator

Distribution by
Rs-online

51-
451.036



https://rs-online.eao.com/component/51-451.03...

Your product:



51-451.036
Actuator

FRONT

Front dimension:	18 mm x 18 mm
Front form:	Square
Front bezel colour:	Black
Front bezel material:	Plastic

MOUNTING

Design:	Raised
Mounting type:	Panel mounting

OPERATING-/INDICATION PART

Lens illumination:	Illuminated

ELECTRICAL CHARACTERISTICS

Switching voltage and switching current:	100 mA at 42 VAC/VDC
Contacts:	2 NO
Switching rating:	42 V @ 0,1 A
Electric strength:	2500 VAC, 50 Hz, 1 min. between all terminals and earth, according to IEC 61058-1, part 15

MECHANICAL CHARACTERISTICS

Terminal:	Universal terminal, 2 x 0.5 mm
Contact material:	Gold
Switching action:	

Momentary

Switching system:	Low-level element
Switching system:	This low-level switching element was designed for switching low powers in electronic circuits. The mechanism assures reliable switching of loads ranging from a few µA/µV up to 100 mA/ 42 VAC/DC. Single-break momentary contact, as normally open or normally closed with 4 independent points of contact. 2 momentary contactsper switching element; combination of normally open and normally closed is possible. Special features are the long life, extremely short rebound time and stable contact resistance.
Mechanical lifetime:	5 Mil. cycles of operation
Operating force:	1,8 ... 3,5 N
Operating Travel:	3 mm
Tightening torque:	Fixing nut max. 0.5 Nm
Terminal details 1:	The universal terminals permit these units to be mounted on printed circuit boards (PCB). These terminals can also be used as soldering or plug-in terminals. For these terminals we can also supply a plug-in base which, when soldered on to the board, enables the switch to be plugged in.
Weight:	0.007 kg

AMBIENT CONDITION

IP front protection:	IP65, according to DIN EN 60529
Operating temperature:	– 25 °C ... + 55 °C, mounted as a block, make sure the heat can escape freely
Storage temperature:	– 40 °C ... + 85 °C
Shock resistance:	15 g for 11 ms, as per DIN / EN 60512-4-3, DIN / EN 60068-2-27 (Single impacts, semi-sinusoidal)

CERTIFICATE

REACH:	REACH compliant
RoHS:	RoHS compliant

OTHER

Short Description:	Actuator, 18 mm x 18 mm, Illuminated, Square, Black, Plastic, 2 NO, Momentary, Universal terminal, 2 x 0.5 mm, IP65, according to DIN EN 60529
Internal size:	15,3 mm x 15,3 mm
Housing colour:	Black
Wiring diagrams:	

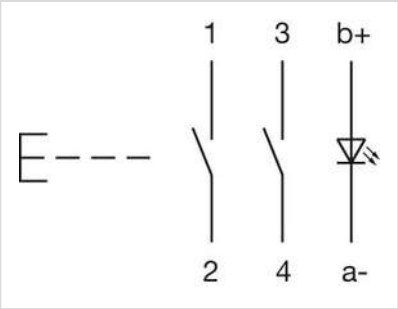

Component layouts:

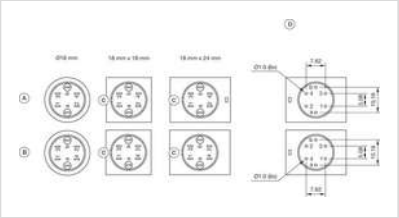

A = Universal terminal (rear side)
B = Plug-in terminal (rear side)
C = Anti twist device
D = Drilling plan

Mounting cut-outs:

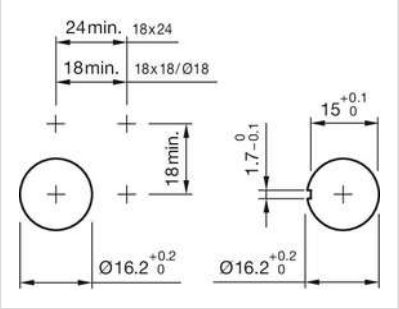

Dimension drawings:

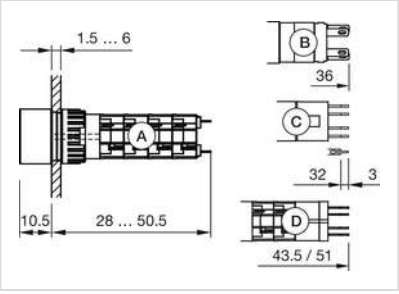

A = Solder terminal
B = Plug-in terminal 2.8 mm x 0.5 mm
C = Universal terminal 2.0 mm x 0.5 mm
D = Universal-Solder terminal