Field-Attachable Connectors

BCC M435-0000-2A-000-A1X575-000
Order Code: BCC09JW

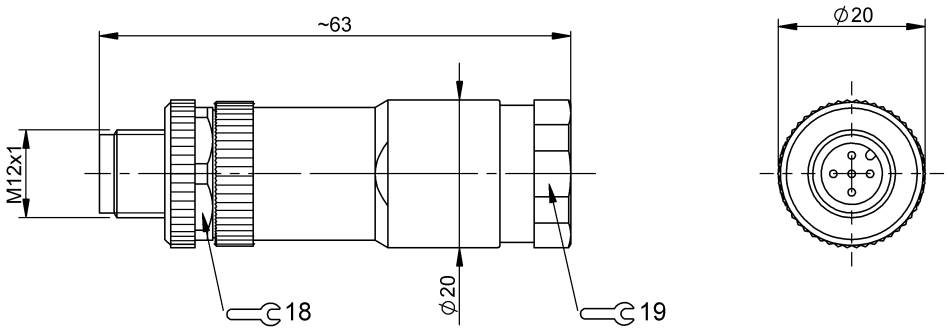

Basic features

Approval/Conformity	CE cURus EAC WEEE

Electrical connection

Cable diameter (2nd sleeve)	4...5 mm
Cable diameter D	2.1...3 mm
Connection	M12x1-Male, Straight, 5-pin, A-coded
Number of connectable contacts	5
System	Can be fabricated

Electrical data

Operating voltage Ub	125 VDC / 125 VAC
Rated current (40 °C)	4.0 A

Environmental conditions

Ambient temperature	-40...85 °C
IP rating	IP67

Material

Material contact carrier	PA
Material contacts	Brass
Material cover nut	Die-cast zinc
Material grip	PA

Mechanical data

Connection cross-section	0.14...0.75 mm²
Tightening torque pigtail	0.6 Nm
Type of wire mounting	Screw terminals

Remarks

Enclosure rating per IEC 60529, only in screwed state with the associated mating piece.
Includes 2 seal rings for 2 cable connections

BCC M435-0000-2A-000-A1X575-000
Order Code: BCC09JW

Connector Drawings

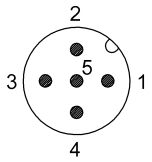

PIN 1-5 usable

Help Views

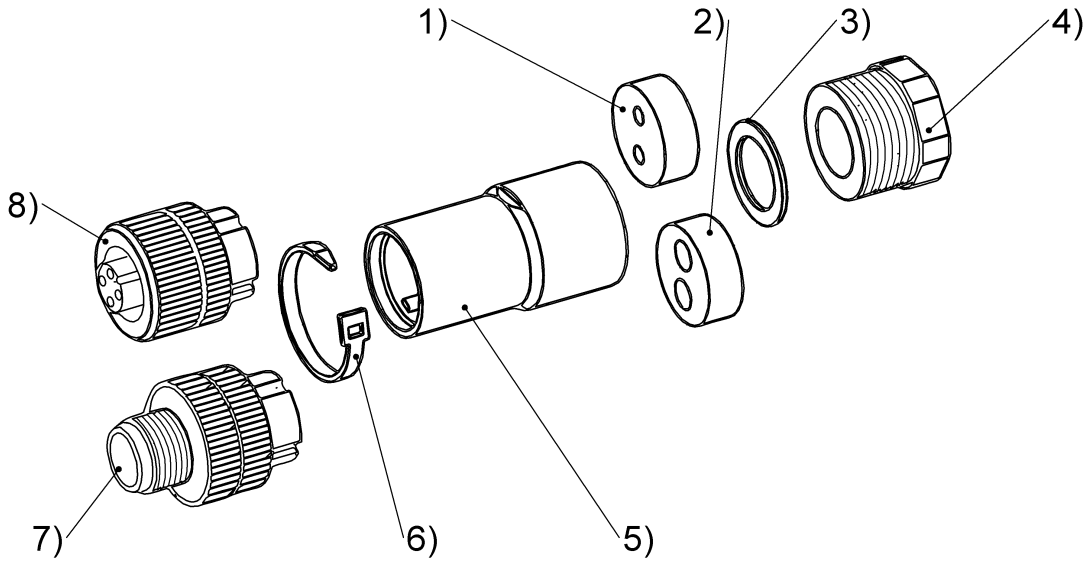

1) Seal for cable Ø 2,1-3,0 mm
2) Seal for cable Ø 4,0-5,0 mm
3) Thrust collar
4) Pressing screw
5) Sleeve
6) Cable tie
7) Male insert
8) Female insert