VARIMETER
Motor Load Monitor
BH 9097

0239914



Function Diagram for Setting De-energized on Fault*)

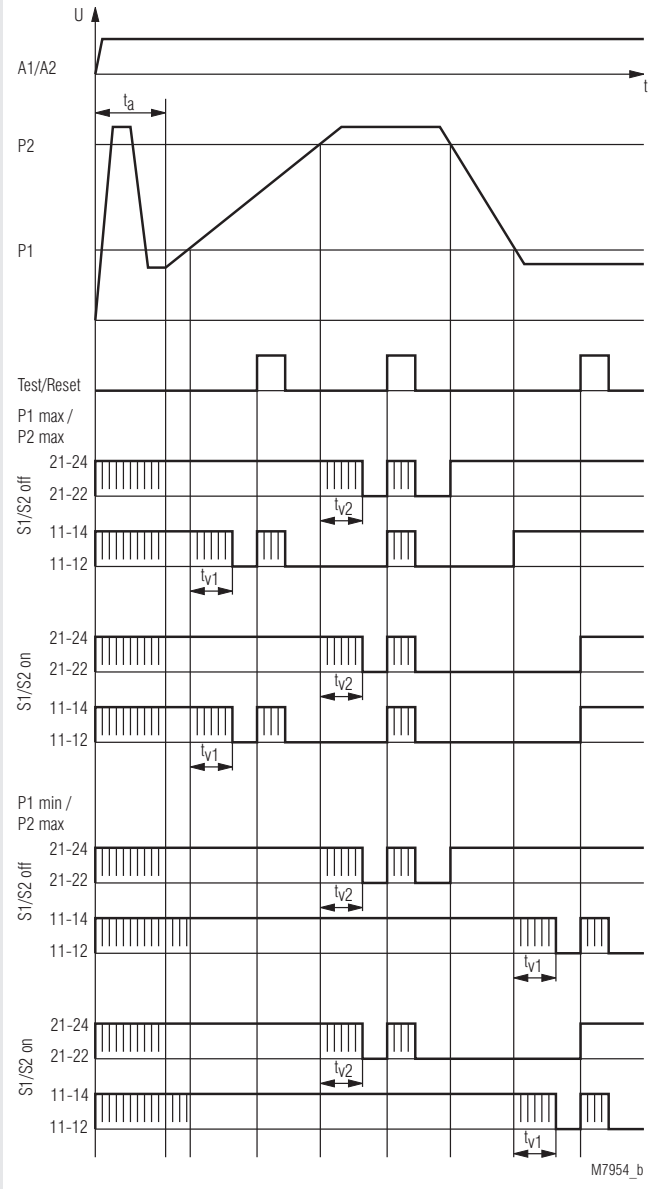

P1max/P2max: Overload monitoring with prewarning
P1min/P2max: Under- and overload monitoring
S1/S2 ON: manual reset
S1/S2 OFF: automatic reset
IIIII: corresponding LED is flashing
*) when set to energized on fault the function of LEDs and output relays are inverted.

- According to IEC/EN 60255-1, IEC/EN 60255-26, DIN/VDE 0435-303
- Identification of
  - Underload P_1 and Overload P_2
  - Overload P_1 (prewarning) and Overload P_2
  programmable
- Adjustment of P_1 and P_2 on absolute scale
- For motors up to 22 kW / 400 V; 37 kW / 600 V
- Measurement: effective power
- Large current range because of automatic range selection
- 1 changeover contact for P_1 and 1 changeover contact for P_2
- Adjustable start-up delay t_a
- Adjustable switching delay t_v
- With automatic or manual reset, programmable
- Test / Reset button for easy setup
- Up to 40 A without external current transformer
- De-energized or energized on fault, programmable
- Also for single-phase operation
- LED indicators
- Width 45 mm

Approvals and Markings

A025518

* see variants

Applications

The BH 9097 is used to monitor variable loads on industrial motors.

Function

The motor load monitor BH 9097 checks the active power consumption of electrical consumers. As the measuring principle is only single phase correct measurement of 3-phase load is only possible when all three phases have the same load which is normal with motors. Using DIP-switches the unit can be set up to act as under- and overload relay P_{1min} / $P_{2\,max.}$ or as overload relay with pre-warning $P_{1\,max.}$/$P_{2\,max.}$ The settings of P_1 and P_2 are absolute values and calibrated in Watts adjustable via rotational switches. 2 LEDs show the state of the corresponding output relays. The unit can be configured to energise or to de-energise on fault. Every output relay is fitted with it´s own time delay t_v. A start-up delay t_a acts on both outputs.

Indication

green LED, U_N:	flashing:	during Start-up delay t_a
	continuous:	supply connected
yellow LED, P_1:	flashing:	during time delay t_{v1} and for set up assistance
	continuous:	when relay P_1 active (contact 11-14)
yellow LED, P_2:	flashing:	during time delay t_{v2} and for set up assistance
	continuous:	when relay P_2 active (contact 21-24)

Fault indication

2 different faults are displayed with the LEDs.

1.) No measurement:
Without measuring voltage measurement is not possible
- All 3 LEDs flash in sequence one after the other.
The output contacts are in failure state.

2.) The BH 9097 measures negative load:
Possible reason: The unit measures reverse power or the current connections are connected wrong.
- All 3 LEDs flash simultaneously.

All Technical Data in this list relate to the state at the moment of edition. We reserve the right for technical improvements and changes at any time.

Connection Diagrams

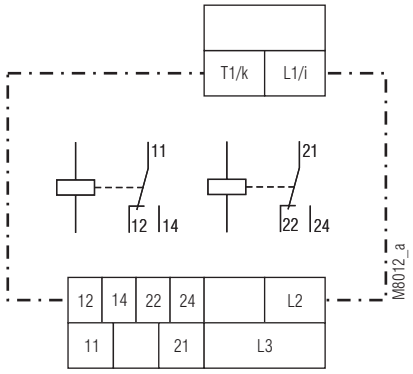

BH 9097.38/001

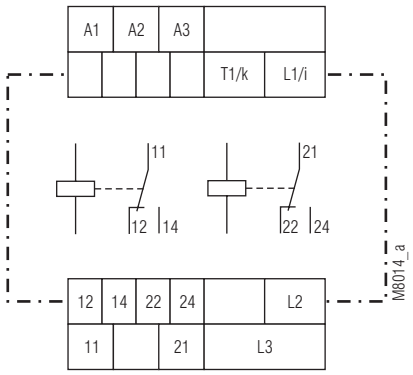

BH 9097.38/011

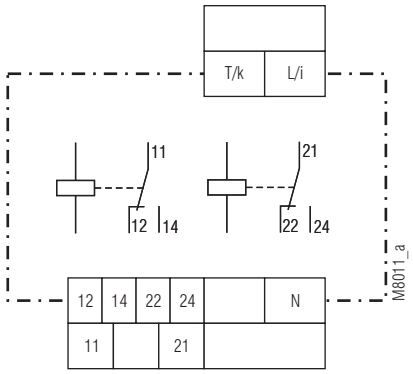

BH 9097.38

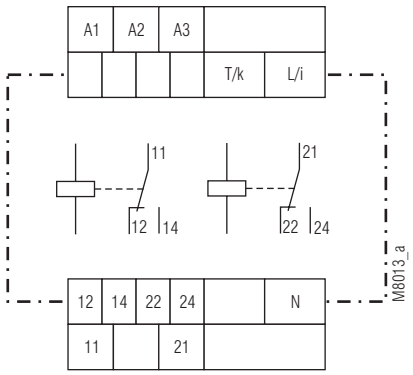

BH 9097.38/010

Technical Data

Input

Measuring voltage
Voltage range: without auxiliary voltage 0.8 ... 1.1 x U_N
with auxiliary voltage, see setting ranges
Input resistance: 300 kΩ ... 500 kΩ
Measuring current
Measuring range: see setting ranges

Nominal current [A]	40	24	8	2.4	0.8	0.24
Permissible current range (overload) [A] continuously:	0 ... 40	0 ... 40	0 ... 16	0 ... 8	0 ... 2,4	0 ... 1
1 min. (10 min. break):	150	150	20	16	3	1,5
20 s (10 min. break):	200	200	25	20	4	2
Input res. of current on i-k [mΩ]:	≤ 1	≤ 1	7	14	830	830

Frequency range: 10 ... 400 Hz
(please see characteristics M7953)

Setting Ranges

P_1 und P_2 on absolute scale
Switch
load range
for P1 and P2: lower range
upper range
Measuring accuracy
(in % of setting value): ± 4 % (2 % on request)
Hysteresis
(in % of setting value): < 5 %
Harmonic distortion < 40 %
Reaction time: < 50 ms
Switching delay t_{v1}/t_{v2}: 0 ... 10 s (infinite variable)
Start-up delay t_a: 0 ... 30 s (infinite variable)

Setting Ranges

Available variants	**Measuring voltage U_N**	**Measuring current I_N [A]**	**selection of load range**
1-phase			
without auxiliary voltage			
BH 9097.38/000	AC 230 V	0.0024 ... 0.24	0.1 ... 60 W
	AC 230 V	0.024 ... 2.4	1 ... 600 W
	AC 230 V	0.24 ... 24	10 ... 6000 W
with auxiliary voltage			
BH 9097.38/010	AC 35...250 V	0.0024 ... 0,24	0.1 ... 60 W
	AC 35...250 V	0.024 ... 2,4	1 ... 600 W
	AC 35...250 V	0.24 ... 24	10 ... 6000 W
3-phase			
without auxiliary voltage			
BH 9097.38/001	3 AC 400 V	0.008 ... 0,8	0.1 ... 60 W
	3 AC 400 V	0.08 ... 8	10 ... 6000 W
	3 AC 400 V	0.4 ... 40	0.1 ... 30 kW
with auxiliary voltage			
BH 9097.38/011	3 AC 60 ... 440 V	0.008 ... 0,8	1 ... 600 W
	3 AC 60 ... 440 V	0.08 ... 8	10 ... 6000 W
	3 AC 100 ... 760 V	0.4 ... 40	0.1 ... 52 kW

Auxiliary Circuit

Auxiliary voltage U_H
only for BH 9097.38/010,
BH 9097.38/011: AC 110 V (Klemmen A 1 - A 2),
AC 230 V (Klemmen A 1 - A 3),
DC 24 V
Voltage range: 0.8 ... 1.1 U_H
Frequency range of U_H: 45 ... 400 Hz
Input current
AC 110 V: approx. 30 mA
AC 230 V: approx. 15 mA
DC 24 V: approx.. 50 mA

Technical Data

Output

Contacts:	1 changeover contact for P1 1 changeover contact for P2	
Thermal current I_{th}:	2 x 5 A	
Switching capacity		
to AC 15		
NO contact:	3 A / AC 230 V	IEC/EN 60 947-5-1
NC contact:	1 A / AC 230 V	IEC/EN 60 947-5-1
to DC 13:	1 A / DC 24 V	IEC/EN 60 947-5-1
Electrical life		
to AC 15 at 3 A, AC 230 V:	2 x 10^5 switching cycles	IEC/EN 60 947-5-1
Permissible switching frequency:	1800 switching cycles / h	
Short circuit strength		
max. fuse rating:	4 A gl	IEC/EN 60 947-5-1
Mechanical life:	30 x 10^6 switching cycles	

General Data

Operating mode:	continuous	
Temperature range:	- 20 ... + 55°C	
Clearance and creepage distances		
rated impulse voltage / pollution degree:	4 kV / 2	IEC 60 664-1
EMC		
Electrostatic discharge:	8 kV (air)	IEC/EN 61 000-4-2
HF-irradiation:	10 V / m	IEC/EN 61 000-4-3
Fast transients:	2 kV	IEC/EN 61 000-4-4
Surge voltages between		
wires for power supply:	1 kV	IEC/EN 61 000-4-5
between wire and ground:	2 kV	IEC/EN 61 000-4-5
HF-wire guided:	10 V	IEC/EN 61 000-4-6
Interference suppression:	Limit value class B	EN 55 011
Degree of protection		
Housing:	IP 40	IEC/EN 60 529
Terminals:	IP 20	IEC/EN 60 529
Housing:	Thermoplastic with V0 behaviour according to UL subject 94	
Vibration resistance:	Amplitude 0,35 mm frequency 10 ... 55 Hz	IEC/EN 60 068-2-6
Climate resistance:	20 / 055 / 04	IEC/EN 60 068-1
Terminal designation:	EN 50 005	
Wire connection		
Load terminals:	1 x 10 mm² solid or 1 x 6 mm² stranded wire with sleeve	
Control terminals:	1 x 4 mm² solid or 2 x 1.5 mm² stranded wire with sleeve or 1 x 2,5 mm² stranded wire with sleeve DIN 46 228-1/-2/-3/-4	
Wire fixing:	Box terminals with self-lifting wire protection and Plus-minus terminal screws M3.5	
Mounting:	DIN rail	IEC/EN 60 715
Weight:	430 g	

Dimensions

Width x height x depth:	45 x 84 x 121 mm

CCC-Data

Thermal current I_{th}:	4 A	
Switching capacity		
to AC 15:	3 A / AC 230 V	IEC/EN 60 947-5-1
to DC 13:	1 A / DC 24 V	IEC/EN 60 947-5-1

Technical data that is not stated in the CCC-Data, can be found in the technical data section.

Standard Type

BH 9097.38/001 3 AC 400 V 50 / 60 Hz t_a 30 s t_v 10 s
Article number: 0053944

- 3-phase, without auxiliary supply
- Output: 1 changeover contact for P1 and 1 changeover contact for P2
- Nominal voltage U_N: 3 AC 400 V
- Width: 45 mm

Variants

BH 9097:	with CCC-approval on request
BH 9097.38/001:	3-phase without auxiliary supply
BH 9097.38/011:	3-phase with auxiliary supply
BH 9097.38/000:	1-phase without auxiliary supply
BH 9097.38/010:	1-phase with auxiliary supply
BH 9097.38/1_ _:	With galvanically separated current path. For applications with current transformers grounded on the secondary side, current range limited to 25 A
BH 9097.38/801:	same as BH 9097.38/001, but with start up delay t_a = 0 ... 10 s

Ordering example for variants

BH 9097 .38 /_ _ _ 3 AC 100...760 V AC 40 A AC 230/110 V

- AC 230/110 V: Auxiliary voltage U_H
- AC 40 A: Max. nom. current I_N of input circuit
- 3 AC 100...760 V: Nominal voltage U_N of input circuit
- _ _ _: Variant, if required
- .38: Contacts
- BH 9097: Type

Characteristics

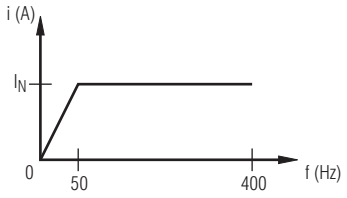

M7953

Max. input current curve in relation to input frequency

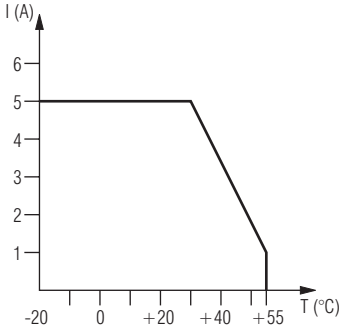

continuous current limit curve (current over 2 contacts) M8367

Settings

2 rotational switches for P_1:	Value P_1 (2 decades)
2 rotational switches for P_2:	Value P_2 (2 decades)
Potentiometer t_{v1}:	time delay for value P_1
Potentiometer t_{v2}:	time delay for value P_2
Potentiometer t_a:	start-up delay after connection voltage
Test/Reset-Taste:	Test function as setting assistance Reset function when manual reset is selected

Dip-switches:



x10 I x1	selection of upper / lower load range
A I R	selection of closed or open circuit operation for output relays
$P_{2\,max.}$ I $P_{2\,max.}$ $P_{1\,max.}$ I $P_{1\,min.}$	2 MAX switching values (Overload with Pre-warning) or MAX and MIN switching value (Overload / Underload monitoring)
S1 ON I OFF:	manual / automatic reset for P_1
S2 ON I OFF:	manual / automatic reset for P_2

Connection

The device has to be connected according to the connection diagrams. The motor is connected to terminals L/i and T/k or L1/i and T1/k. The flow direction of the current has to be observed. On reverse power the unit gives a fault signal. The max continuous motor current is 40 A limited by the terminals. With higher currents a current transformer with 2,5 VA has to be used.

Set-up Procedure and Setting Instructions

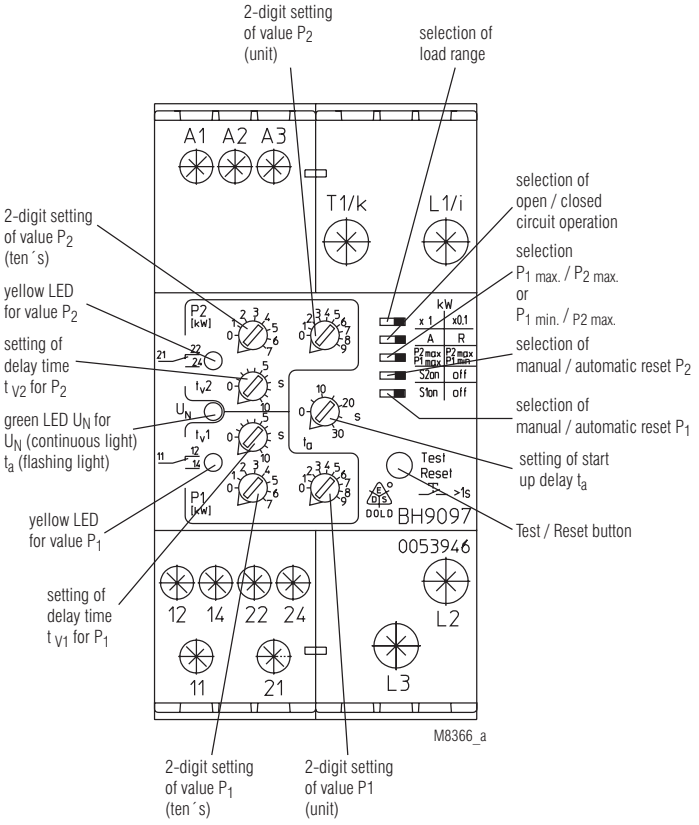

Adjustemt example: response value: 2,5 kW

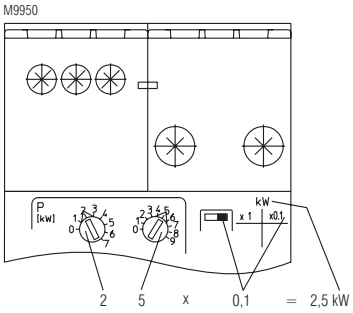

Response value = 25 x 0,1 = 2,5 kW

The adjustment of the unit can be made without additional measuring equipment and calculations. Please make sure that the load values are in the permitted operating range of the unit. Based on the max permitted values the BH 9097 can be used for 48 kW 3-phase motors at 3 AC 690 V and 5.8 kW single phase motors at AC 230 V.

There are three methods to set up the unit:

Method 1:
If the absolute values of the actual required tripping points P_1 and P_2 are known, they can be set directly on the unit (2-digit setting of P_1 and P_2).

Method 2:
This method is recommended when it is possible to simulate the different load situations during set-up. In this case nothing has to be calculated. Turn the delay time for P_1 and P_2 to min. The motor runs in underload while the Pot 1 is turned until the output relay switches. The same has to be done for overload. Now the unit is set accurately. Now adjust the operate delay and the start-up delay to the required values.
Pressing the test / reset button during setup disables the switching of the output relays. The LEDs of P_1 and P_2 flash.

Method 3:
This method is the most simple one but not the most accurate. The operate delay is set to min. The motor is switched on and runs on nominal load. With both potentiometers the set points are searched by slowly turning the max. Pot from high to low value and the min. Pot from low to high value until the corresponding output relays switch. After that turn the Pot P_2 to the right (e.g. + 10 %) side and the Pot P_1 to the left (e.g. - 10 %) until the output relays reset. The unit is now set and responds if the load differs from the nominal value. Finally set the operate delay and start-up delay to the required values. The DIP switch should be set to $P_{1\,min}$ / $P_{2\,max}$.

Connection Examples

single phase

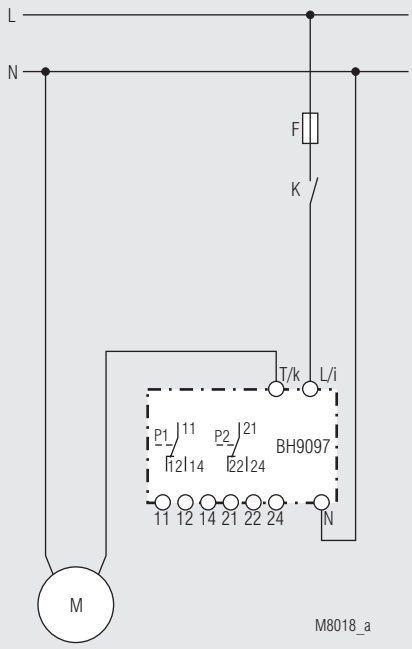

BH 9097.38

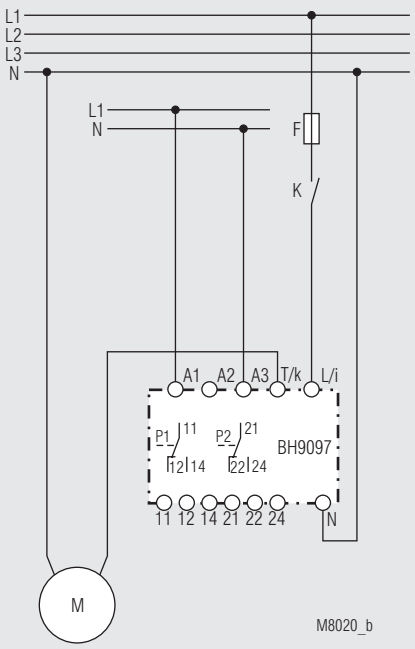

BH 9097.38/010

3-phase

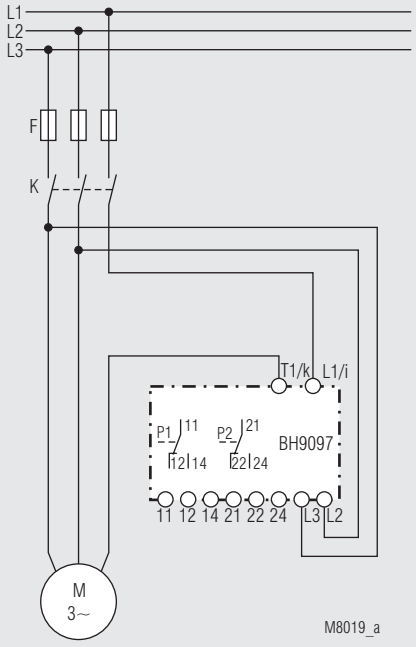

BH 9097.38/001

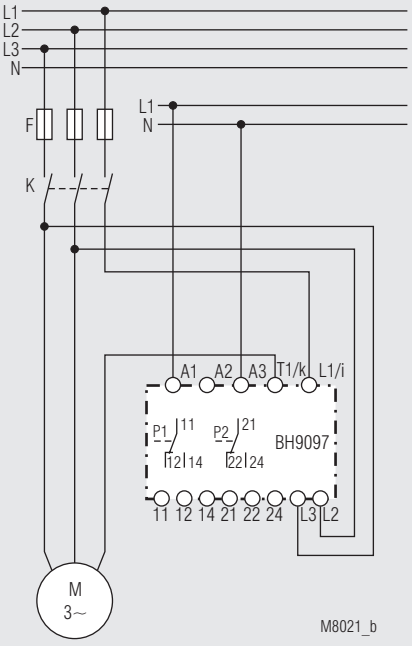

BH 9097.38/011

Connection Examples with External Current Transformer

single phase

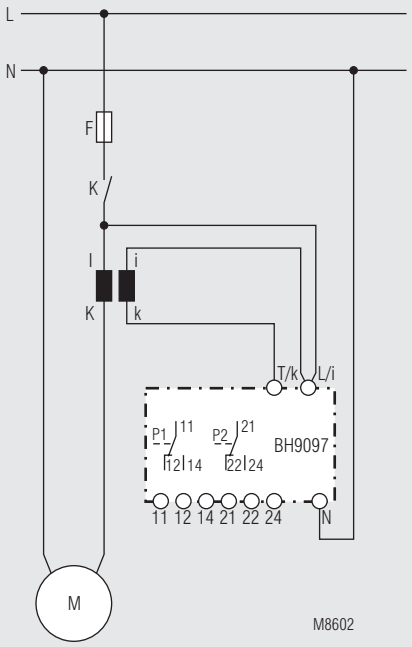

BH 9097.38

3-phase

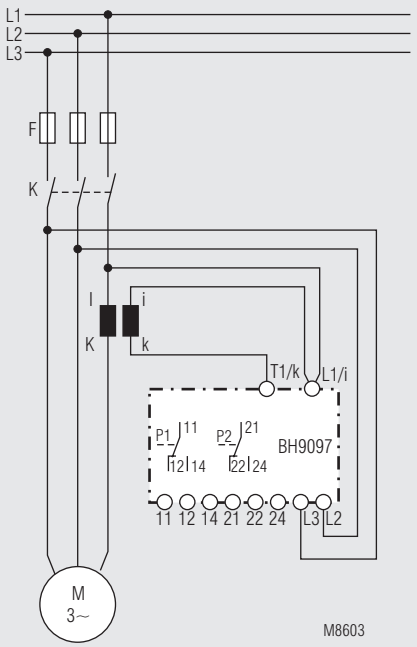

BH 9097.38/001

Note: When using external CTs the adjusted value has to be multiplied with the transmission ratio (ü) of the CT.

Example: Switching value = Setting value (P1/P2) x ü