34812-914 FRAME TYPE PLUG-IN UNIT COVER PLATE, WITH PERFORATION FOR GUIDE RAILS, 14 HP, PCB 167 MM

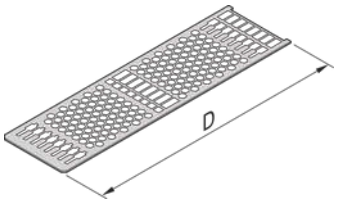

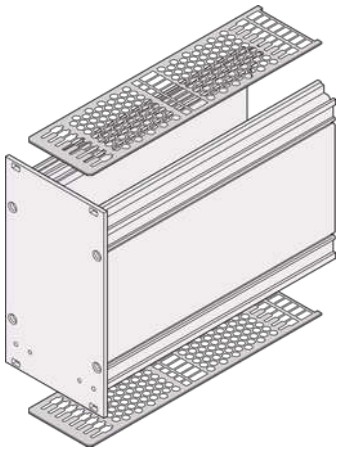

KEY FEATURES

Air flow rate-in perforated area approx. 60-%

Cover plate is inserted top and bottom between the side Panels

PRODUCT ATTRIBUTES

Product Type: Cover

Type: Cover Plate

Works With: Frame Type Plug-In Unit

Rack Width: 14 HP

Depth: 167 mm

Package Quantity: 10

ADDITIONAL PRODUCT DETAILS

Cover plate for frame-type plug-in units, with perforation for guide rail fixing. The perforation guarantee an air flow rate by approx. 60%. The plate is inserted into a groove of the side Panel.

Please order guide rails for fitting in the plug-in unit separately.

Please take into consideration that deliveries may be carried out in the stated SPQs (SPQ, e.g. 5 pieces, 10 pieces, 50 pieces, etc.). Differing order quantities (e.g. 2 pieces) may be changed to the next possible delivery quantity = Standard Pack Quantity.

CERTIFICATIONS

RoHS COMPLIANT

North America
All locations
+1.763.422.2661
Chat with us:
schroff.nvent.com

Europe
Straubenhardt, Germany
+49.7082.794.0
Betschdorf, France
+33.3.88.90.64.90
Warsaw, Poland
+48.22.209.98.35
Assago, Italy
+39.02.932.7141
Chat with us:
schroff.nvent.com

Asia
Shanghai, China
+86.21.2412.6943
Qingdao, China
+86.532.8771.6101
Singapore
+65.6768.5800
Shin-Yokohama, Japan
+81.45.476.0271
Chat with us:
schroff.nvent.com

Middle East & India
Dubai, United Arab Emirates
+971.4.378.1700
Bangalore, India
+91.80.6715.2001
Istanbul, Turkey
+90.216.250.7374
Chat with us:
schroff.nvent.com

nVent

Our powerful portfolio of brands:
nVent.com CADDY ERICO HOFFMAN RAYCHEM SCHROFF TRACER

© 2023 nVent. All nVent marks and logos are owned or licensed by nVent Services GmbH or its affiliates. All other trademarks are the property of their respective owners.

nVent reserves the right to change specifications without notice.