Ex foot switches
Ex GFI 1Ö/1S -40°C ... +55°C IP66/67 Extreme
Material number: 1318066

Features/Options

- Ex zone 1 and 21
- 1-pedal type
- Corrosion-resistant aluminium enclosure
- Without protective shield
- Salt-mist spray test to DIN EN ISO 9227
- High degree of protection IP 66 / IP 67
- Temperature resistant from -40 °C to +55 °C
- Screws and metal parts made of stainless steel
- Wiring compartment
- Low pedal height

Dimensions

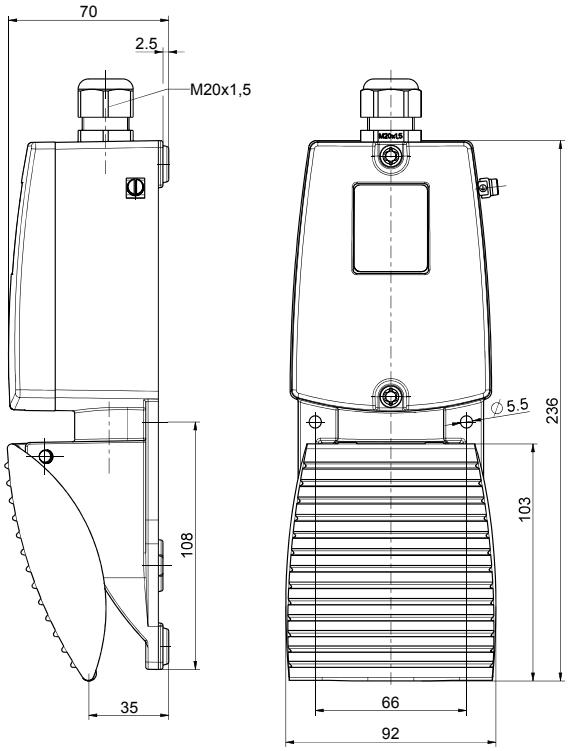

Technical data

Standards	EN 60947-5-1; EN 60079-0, EN 60079-1, EN 60079-7, EN 60079-31, EN ISO 13849-1
Enclosure	Corrosion-resistant aluminium, powder-coated, similar to RAL 7016 and RAL 1003
Pedal	Corrosion-resistant aluminium, hard- and powder-coated, similar to RAL 7016
Connection	screw connection terminals
Cable cross-section	max. 2.5 mm² (incl. conductor ferrules)
Degree of protection	IP 66/67 to IEC/EN 60529
Contact material	silver
Switching system	slow action, positive break NC contacts ⊖
Switching elements	1 NC/1 NO contact, type Zb
B_{10d} (10 % Load)	2 million
T_M	max. 20 years
Utilisation category	AC-15; DC-13
I_e/U_e	5 A/250 VAC; 0.2 A/230 VDC
Max. fuse rating	5 A gG/gN fuse
Ambient temperature	T6: –40 °C ... +55 °C
Mechanical life	> 1 million operations
Impact energy	max. 7 J
Ex marking	⟨Ex⟩ II 2G Ex de IIC T6 Gb, ⟨Ex⟩ II 2D Ex tb IIIA T80°C Db IECEx Ex de IIC T6 Gb, Ex tb IIIA T80°C Db
Approvals	PTB 15 ATEX 1010 IECEx PTB 15.0035

Errors and omissions excepted.

steute Schaltgeräte GmbH & Co. KG | Brückenstraße 91 32584 Löhne, Germany | Telefon +49 (0) 5731 745-0 Telefax +49 (0) 5731 745-200 | info@steute.com www.steute.com

Ex foot switches
Ex GFI 1Ö/1S -40°C ... +55°C IP66/67 Extreme
Material number: 1318066

Contact diagram

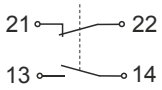

Switching diagram

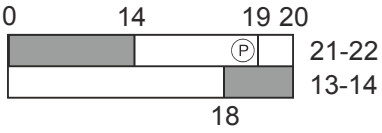

steute Schaltgeräte GmbH & Co. KG | Brückenstraße 91 32584 Löhne, Germany | Telefon +49 (0) 5731 745-0 Telefax +49 (0) 5731 745-200 | info@steute.com www.steute.com