Product data sheet
Characteristics

XUK5LAPSMM12
photo-electric laser sensor - XUK - diffuse energetic - Sn 1,2m - 10..30VDC -M12

Product availability : Stock - Normally stocked in distribution facility

Price* : 270.00 USD



Main

Range of product	OsiSense XU
Series name	Application assembly Application material handling
Electronic sensor type	Photo-electric sensor
Sensor name	XUK
Sensor design	Compact 50 x 50
Detection system	Diffuse
Material	Plastic
Type of output signal	Discrete
Supply circuit type	DC
Wiring technique	4-wire
Discrete output type	PNP
Discrete output function	1 NO or 1 NC programmable
Electrical connection	1 male connector M12, 4 pins
Product specific application	-
Emission	Red laser diffuse (class 1)
[Sn] nominal sensing distance	3.94 ft (1.2 m) diffuse

Complementary

Enclosure material	ABS/PC
Lens material	PMMA
Maximum sensing distance	3.94 ft (1.2 m) diffuse
Output type	Solid state
Cable composition	3 x 0.34 mm²
Wire insulation material	PVC
Cable outer diameter	0.24 in (6 mm)
Status LED	1 LED (yellow) output state 1 LED (green/yellow) supply on/output state
[Us] rated supply voltage	12...24 V DC with reverse polarity protection
Supply voltage limits	10...36 V DC

Disclaimer: This documentation is not intended as a substitute for and is not to be used for determining suitability or reliability of these products for specific user applications

Switching capacity in mA	<= 100 mA (overload and short-circuit protection)
Switching frequency	<= 250 Hz
Voltage drop	<= 1.5 V (closed state)
Current consumption	<= 30 mA (no-load)
Delay first up	< 300 ms
Delay response	< 0.8 ms
Delay recovery	< 0.8 ms
Setting-up	Using teach button or remote teaching
Depth	1.97 in (50 mm)
Height	1.97 in (50 mm)
Width	0.91 in (23 mm)
Product weight	0.08 lb(US) (0.035 kg)

Environment

Product certifications	CE cULus Ecolab
Ambient air temperature for operation	-4...122 °F (-20...50 °C), UL certified -4...140 °F (-20...60 °C)
Ambient air temperature for storage	-4...176 °F (-20...80 °C)
Vibration resistance	7 gn (f = 10...55 Hz) conforming to IEC 60068-2-6
Shock resistance	10 gn (duration = 11 ms) conforming to IEC 60068-2-27
IP degree of protection	IP67 conforming to IEC 60529 IP69K conforming to DIN 40050

Ordering and shipping details

Category	22481 - SENSORS, PHOTOELECTRIC
Discount Schedule	DS2
GTIN	003389119077576
Nbr. of units in pkg.	1
Package weight(Lbs)	0.12
Returnability	Y
Country of origin	DE

Offer Sustainability

RoHS (date code: YYWW)	Will not be compliant Will not be compliant
California proposition 65	WARNING: This product can expose you to chemicals including:
- - - - - - - Substance 1	Diisononyl phthalate (DINP) which is known to the State of California to cause cancer and
- - - - - - - Substance 2	Di-isodecyl phthalate (DIDP) which is known to the State of California to cause birth defects or other reproductive harm.
- - - - - - - More information	For more information go to www.p65warnings.ca.gov

Contractual warranty

Warranty period	18 months

XUK5LAPSMM12

Dimensions

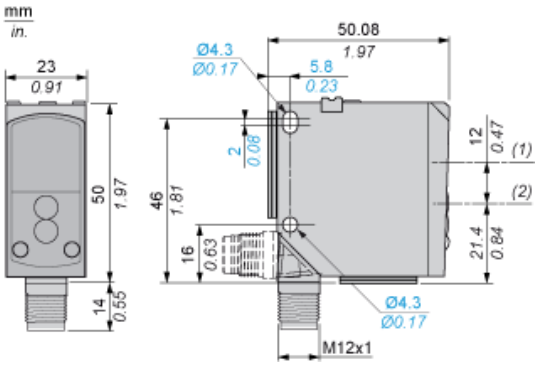

(1) Receiver optical axis
(2) Transmitter optical axis

Wiring Schemes Using M12 Connector

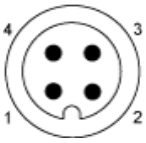

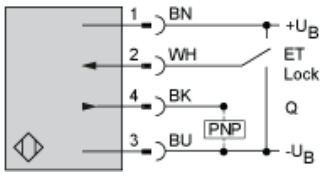

1 : (+)
2 : ET/Lock (1)
3 : (-)
4 : Output
BN : Brown
WH : White
BU : Blue
BK : Black
+UB : External teach
-UB : Pushbutton locking
(1) ET/Lock. ET: External Teach, Lock: Pushbutton locking

Curves

Excess Gain Curve

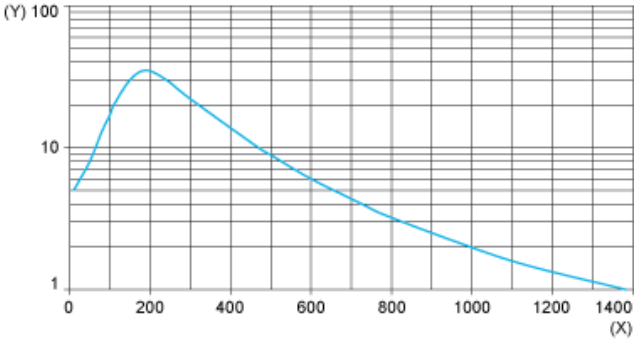

(X) Distance (mm)
(Y) Gain

Size of Luminous Point

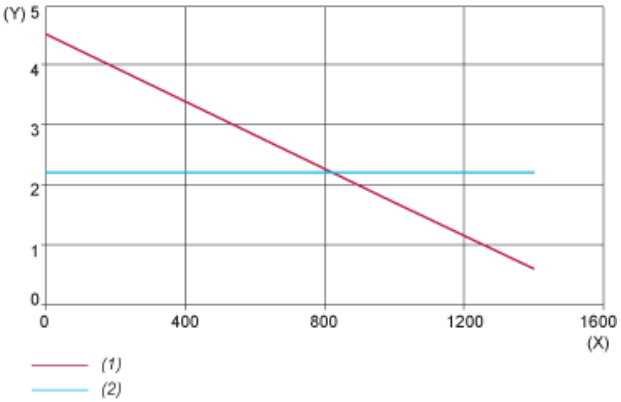

(X) Distance (mm)
(Y) Size (mm)
(1) Vertical (Y)
(2) Horizontal (X)