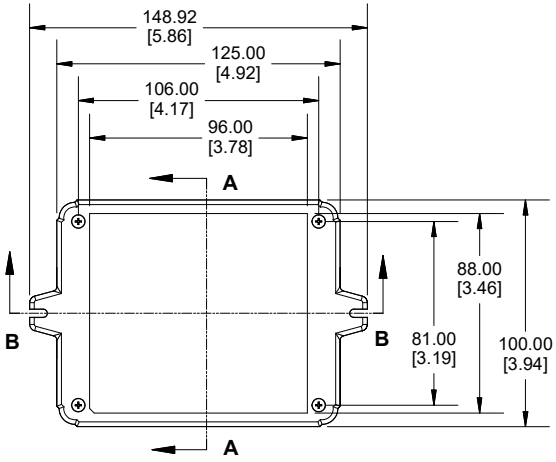

TOP VIEW

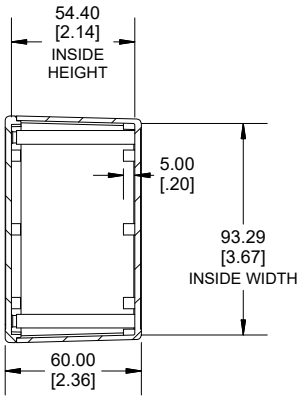

SECTION A-A
END VIEW

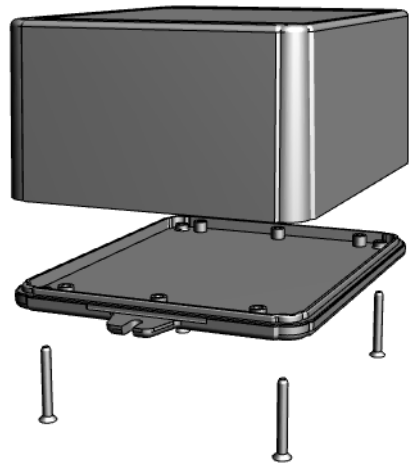

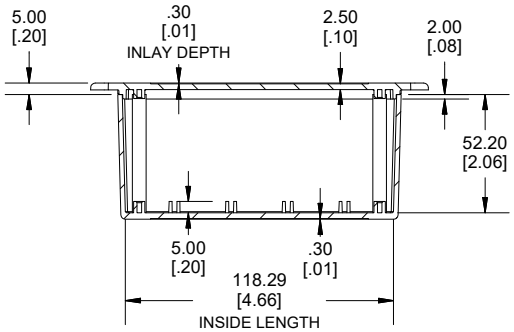

SECTION B-B
SIDE VIEW

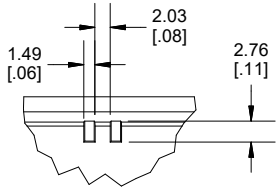

DETAIL C

Enclosures can be Factory Modified (Milling, Drilling, Printing etc.)
Contact Factory (modshop@hammfg.com) for quotes
Solid models of this enclosure available in .stp or .x_t
(Part number and text placement/orientation on our products are subject to change, we do not recommend using them as a locating reference for modification purposes)

NOTE
Purchased assembly includes box, lid, 4 PCB screws, and 4 Lid screws.
Recommended Torque : (43-50) Ozf.in / (30-35) cN.m

RL Enclosure	
General Purpose ABS Light Grey (UL94 HB)	RL6335F
General Purpose ABS Black (UL94 HB)	RL6335FBK
ACCESSORIES	
Lid Screw (M3 X 25mm Self-tapping) (50 Pkg)	SC617-50
PCB Screw (M2.6 X 6mm Self-tapping) (50 Pkg)	SC519-50

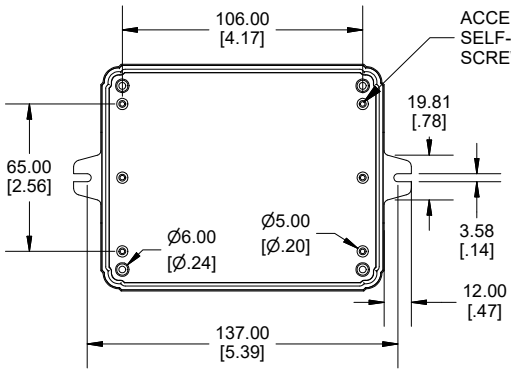

INSIDE LID

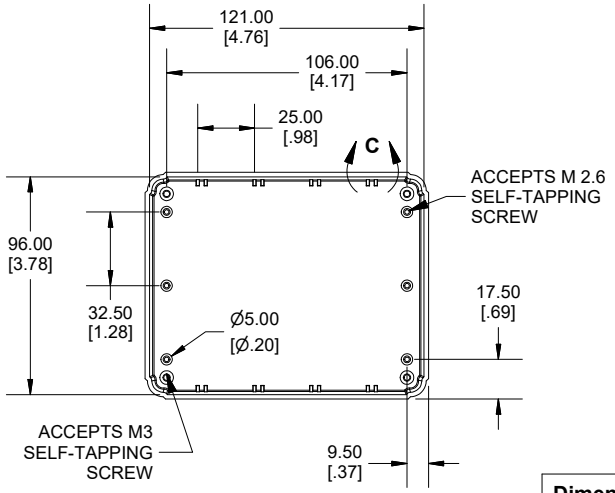

INSIDE BOX

Dimensions:
mm
[inches]

HAMMOND MANUFACTURING®

RL6335F

www.hammondmfg.com

REV14.02.2020