DATA SHEET

Manual motor starter MS116



Manual motor starters (also known as motor protection circuit breakers or manual motor protectors) are electromechanical protection devices for the main circuit mainly used to switch motors manually ON/OFF and protect them fuseless against short-circuits, overloads and phase failures. Fuseless protection with a manual motor starter saves costs, space and ensures a quick reaction under short-circuit condition, by switching off the motor within milliseconds. Fuseless starter combinations are setup together with contactors.

Description

- Overload protection – trip class 10A
- Phase loss sensitivity
- Disconnect function
- Temperature compensation from -25 ... +55 °C
- Adjustable current setting for overload protection
- Suitable for three- and single-phase applications
- Trip-free mechanism
- Clear switch position indication ON/OFF

Order data

MS116 screw terminals

Setting range A	Rated operational power 400 V AC-3 kW	Type	Order code	weight Pkg (1 pce) kg
0.10 ... 0.16	0.03 (1)	MS116-0.16	1SAM250000R1001	0.225
0.16 ... 0.25	0.06	MS116-0.25	1SAM250000R1002	0.225
0.25 ... 0.40	0.09	MS116-0.4	1SAM250000R1003	0.225
0.40 ... 0.63	0.18	MS116-0.63	1SAM250000R1004	0.225
0.63 ... 1.00	0.25	MS116-1.0	1SAM250000R1005	0.225
1.00 ... 1.60	0.55	MS116-1.6	1SAM250000R1006	0.265
1.60 ... 2.50	0.75	MS116-2.5	1SAM250000R1007	0.265
2.50 ... 4.00	1.50	MS116-4.0	1SAM250000R1008	0.265
4.00 ... 6.30	2.20	MS116-6.3	1SAM250000R1009	0.265
6.30 ... 10.0	4.00	MS116-10	1SAM250000R1010	0.265
8.00 ... 12.0	5.50	MS116-12	1SAM250000R1012	0.265
10.0 ... 16.0	7.50	MS116-16	1SAM250000R1011	0.265
16.0 ... 20.0	7.50	MS116-20	1SAM250000R1013	0.310
20.0 ... 25.0	11.0	MS116-25	1SAM250000R1014	0.310
25.0 ... 32.0	15.0	MS116-32	1SAM250000R1015	0.310

Note: For MS116 with pre-assembled auxiliary contact HKF1-11, please order 1SAM250005R10xx.
Manual motor starters should always be selected so that the actual motor current is within the setting range.
(1) 690 V AC

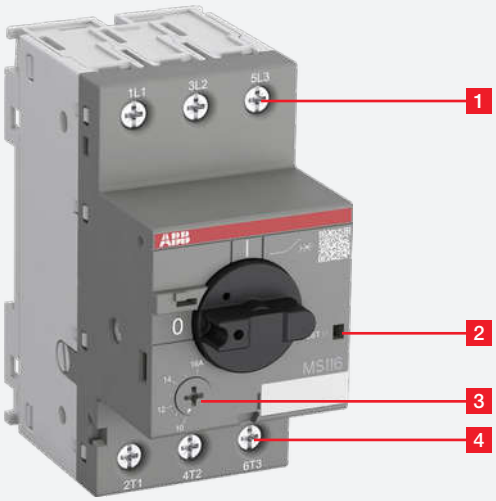

Functional description

1. Terminals 1L1, 3L2, 5L3
2. Test function
3. Current setting range / Adjustable current setting for overload protection
4. Terminals 2T1, 4T2, 6T3

Application

Manual motor starters (also known as motor protection circuit breakers or manual motor protectors) protect the load and the installation against short-circuits and overloads. They are three pole protection devices with thermal tripping elements for overload protection and electromagnetic tripping elements for short-circuit protection. Furthermore, they provide a disconnect function for safe isolation of the installation and the supply and they can be used for manual switching of loads.

Manual motor starters have a setting scale in amperes, which allows direct adjusting of the device without any additional calculation. In compliance with international and national standards, the setting current is the rated current of the motor and not the tripping current (no tripping at 1.05 x I, tripping at 1.2 x I; I = setting current).

Operation mode

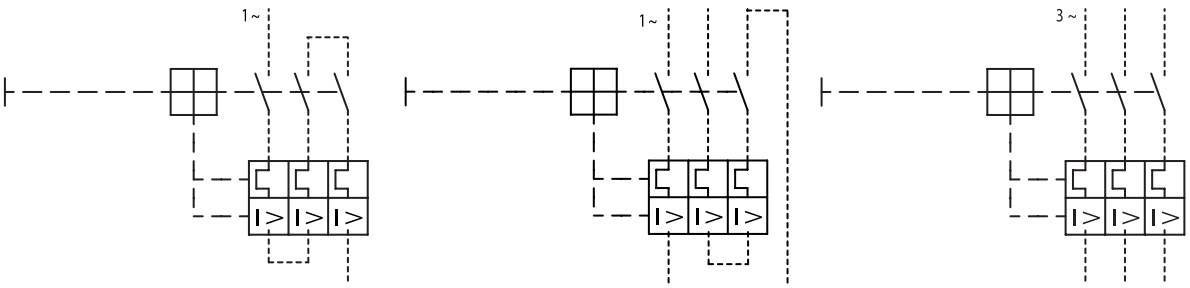

Single-phase operation | Single-phase operation | Three-phase operation

Wiring diagram

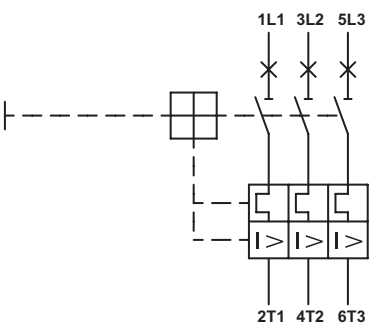

Resistance and power loss per pole

Type	Setting range		Resistance per pole	Power loss per pole	
	lower value	upper value		at lower value	at upper value
	A	A	Ω	W	W
MS116-0.16	0.10	0.16	66.00	0.7	1.7
MS116-0.25	0.16	0.25	25.50	0.7	1.6
MS116-0.4	0.25	0.40	10.38	0.6	1.7
MS116-0.63	0.40	0.63	4.36	0.7	1.7
MS116-1.0	0.63	1.00	1.605	0.6	1.6
MS116-1.6	1.00	1.60	0.648	0.6	1.7
MS116-2.5	1.60	2.50	0.292	0.7	1.8
MS116-4.0	2.50	4.00	0.114	0.7	1.8
MS116-6.3	4.00	6.30	0.046	0.7	1.8
MS116-10	6.30	10.0	0.024	0.9	2.4
MS116-12	8.00	12.0	0.016	1.0	2.3
MS116-16	10.0	16.0	0.011	1.1	2.8
MS116-20	16.0	20.0	0.0057	1.5	2.3
MS116-25	20.0	25.0	0.0045	1.8	2.8
MS116-32	25.0	32.0	0.0030	1.9	3.1

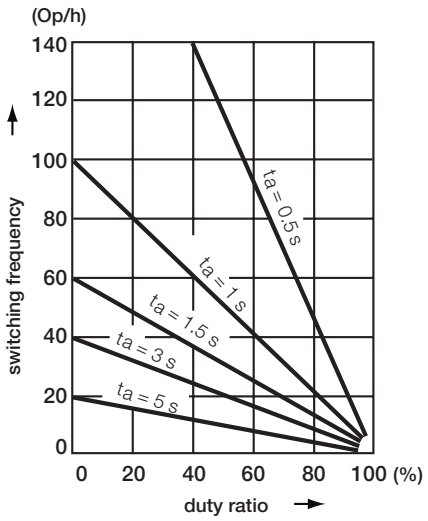

Intermittent periodic duty, ta: Motor starting time

Main dimensions
in mm, inches

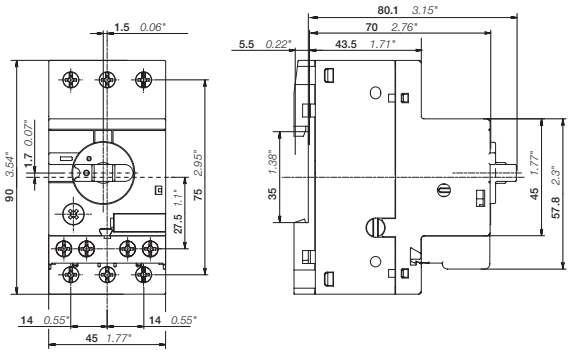

MS116 ≤ 16 A

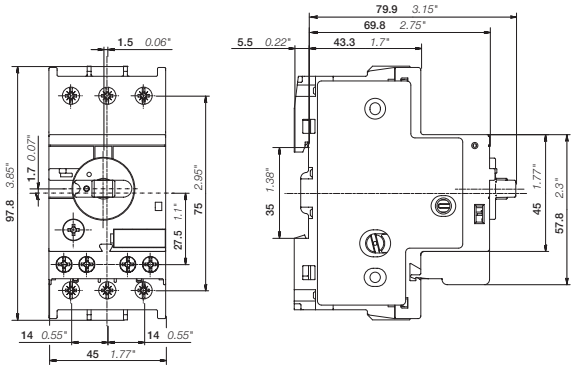

MS116 ≥ 20 A

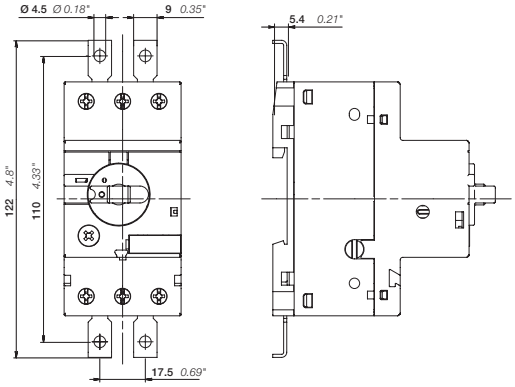

MS116 ≤ 16 A with screw fixing kit FS116 (accessory)

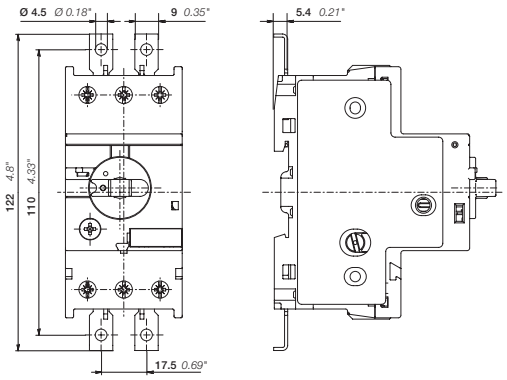

MS116 ≥ 20 A with screw fixing kit FS116 (accessory)

Technical data IEC/EN

Data at T_A = 40 °C and at rated values, if nothing else indicated

Main circuit

Terminal marking	1L1-3L2-5L3 2T1-4T2-6T3
Rated operational voltage Ue	690 V AC
	- V DC
Setting range - thermal overload protection	see table "Order data" on page 1
Rated operational current Ie	see table below
Rated instantaneous short-circuit current setting Ii	see table below
Rated service short-circuit breaking capacity Ics	see table "Short-circuit breaking capacity and back-up fuses" on page 7
Rated ultimate short-circuit breaking capacity Icu	
Trip class	10A
Rated frequency	50/60 Hz
Number of poles	3
Resistance per pole	see table "Resistance and power loss per pole" on page 3
Power loss per pole	

Isolation data

Rated impulse withstand voltage Uimp	6 kV
Rated insulation voltage Ui	690 V
Pollution degree	3

Electrical connection

Type		**MS116 ≤ 16 A**	**MS116 ≥ 20 A**
Connecting capacity			
Rigid	1 or 2 x	1 ... 4 mm²	2.5 ... 6 mm²
Flexible with ferrule	1 or 2 x	0.75 ... 2.5 mm²	1 ... 6 mm²
Flexible with insulated ferrule	1 or 2 x	0.75 ... 2.5 mm²	1 ... 6 mm²
Flexible	1 or 2 x	0.75 ... 2.5 mm²	1 ... 6 mm²
Stripping length		9 mm	10 mm
Tightening torque		0.8 ... 1.2 Nm / 10 ... 12 lb.in	2.0 Nm / 18 lb.in
Recommended screwdriver		Pozidriv 2	Pozidriv 2

Type	**Rated instantaneous short-circuit current setting I_i** A	**Rated operational current I_e** A
MS116-0.16	2.00	0.16
MS116-0.25	3.13	0.25
MS116-0.4	5.00	0.40
MS116-0.63	7.88	0.63
MS116-1.0	12.50	1.0
MS116-1.6	20.00	1.6
MS116-2.5	31.25	2.5
MS116-4.0	50.00	4.0
MS116-6.3	78.75	6.3
MS116-10	150	10
MS116-12	180	12
MS116-16	240	16
MS116-20	300	20
MS116-25	375	25
MS116-32	480	32

General data

Mechanical durability		100000
Electrical durability	MS116 ≤ 16 A	100000
	MS116 ≥ 20 A	50000
Duty time		100 %
Operating frequency without early tripping		up to 15 operations/h or 60 operations/h with 40 % duty ratio, if the motor breaking current 6 x In and the motor starting time does not exceed 1 s
Dimensions (W x H x D)		see drawing on page 4
Weight		see table "Order data" on page 1
Mounting on DIN rail		TH35-15 (35 x 15 mm Mounting Rail) acc. to IEC 60715 TH35-7.5 (35 x 7.5 mm Mounting Rail) acc. to IEC 60715
Mounting position		position 1-6 (optional for single mounting)
Group mounting		on request
Minimum distance to other units same type	horizontal	0 mm
	vertical	150 mm
Minimum distance to electrical conductive board	horizontal, up to 400 V	0 mm
	horizontal, up to 690 V	> 1.5 mm
	vertical	75 mm
Degree of protection	housing / main circuit terminals	IP20 / IP10
Utilization category		A
Maximum operating altitude permissible		2000 m
Maximum operating frequency		170 cycles/h

Environmental data

Ambient air temperature		
Operation	open - compensated	-25 ... +55 °C
	open	-25 ... +70 °C
	enclosed (IB132)	0 ... +40 °C
Storage		-50 ... +80 °C
Ambient air temperature compensation		acc. to IEC/EN 60947-4-1
Resistance to vibrations acc. to IEC 60068-2-6		5g / 3 ... 150 Hz
Resistance to shock acc. to IEC 60068-2-27		25g / 11 ms

Standards / directives

Standards	IEC/EN 60947-1 IEC/EN 60947-2 IEC/EN 60947-4-1 UL 60947-1 UL 60947-4-1 CSA-C22.2 No. 60947-1 CSA-C22.2 No. 60947-4-1
Low Voltage Directive	2014/35/EU
RoHS Directive	2011/65/EU incl. 2015/863/EU

Short-circuit breaking capacity and back-up fuses – MS116

Ics Rated service short-circuit breaking capacity
Icu Rated ultimate short-circuit breaking capacity
Iq (Icc) Rated conditional short-circuit current
- No back-up fuse required, because short-circuit proof up to Icu (for Icu see table below)

Short-circuit breaking capacity and back-up fuses – MS116

Type	230 V AC			400 V AC			440 V AC			500 V AC			690 V AC		
	Ics kA	Icu kA	gG, aM A	Ics kA	Icu kA	gG, aM A	Ics kA	Icu kA	gG, aM A	Ics kA	Icu kA	gG, aM A	Ics kA	Icu kA	gG, aM A
MS116-0.16	50	100	-	50	100	-	50	100	-	30	100	-	30	100	-
MS116-0.25	50	100	-	50	100	-	50	100	-	30	100	-	30	100	-
MS116-0.4	50	100	-	50	100	-	50	100	-	30	100	-	30	100	-
MS116-0.63	50	100	-	50	100	-	50	100	-	30	100	-	30	100	-
MS116-1.0	50	100	-	50	100	-	50	100	-	30	100	-	30	100	-
MS116-1.6	50	100	-	50	100	-	50	100	-	30	100	-	30	100	-
MS116-2.5	50	75	-	50	75	-	10	30	25 (1)	10	20	25 (1)	5	10	25 (1)
MS116-4.0	50	75	-	50	75	-	6	18	25 (1)	6	15	25 (1)	2	3	25 (1)
MS116-6.3	50	75	-	50	75	-	6	18	63 (1)	6	15	63 (1)	2	3	40 (1)
MS116-10	50	75	-	50	75	-	6	18	63 (1)	6	15	63 (1)	2	3	50 (1)
MS116-12	25	50	80 (1)	25	50	80 (1)	6	15	63 (1)	6	15	63 (1)	2	3	50 (1)
MS116-16	16	16	80 (1)	16	16	80 (1)	6	15	63 (1)	4	10	63 (1)	2	3	63 (1)
MS116-20	10	16	125 (1)	10	16	125 (1)	3	15	125 (1)	3	10	125 (1)	2	3	80 (1)
MS116-25	10	16	125 (1)	10	16	125 (1)	3	15	125 (1)	3	10	125 (1)	2	3	100 (1)
MS116-32	10	16	125 (1)	10	16	125 (1)	3	15	125 (1)	3	10	125 (1)	2	3	100 (1)

(1) Maximum rated current of the back-up fuse for short circuit up to 50 kA if Icc > Ics

Technical data UL/CSA

Main circuit

Maximum operational voltage		600 V
Manual Motor Controller ratings		see table "UL 508 — Manual Motor Controller" on page 8
Motor ratings	Horse power	see table below
	Full load amps (FLA)	see table below
	Locked rotor amps (LRA)	see table below

Electrical connection

Type	MS116 ≤ 16 A	MS116 ≥ 20 A
Connecting capacity		
stranded	1/2 x AWG 16 ... 12	1/2 x AWG 16 ... 8
flexible without ferrule	1/2 x AWG 16 ... 12	1/2 x AWG 16 ... 8
Stripping length	9 mm	10 mm
Tightening torque	10 ... 12 lb-In	18 lb-In
Recommended screw driver	M3.5 (Pozidriv 2)	M4 (Pozidriv 2)

UL/CSA Motor ratings, single phase

hp Horse power
FLA Full load amps
LRA Locked rotor amps

Type	110-120 VAC			200 VAC			208 VAC			220-240 VAC		
	hp	FLA	LRA	hp	FLA	LRA	hp	FLA	LRA	hp	FLA	LRA
MS116-0.16	-	0.16	0.96	-	0.16	0.96	-	0.16	0.96	-	0.16	0.96
MS116-0.25	-	0.25	1.5	-	0.25	1.5	-	0.25	1.5	-	0.25	1.5
MS116-0.4	-	0.4	2.4	-	0.4	2.4	-	0.4	2.4	-	0.4	2.4
MS116-0.63	-	0.63	3.78	-	0.63	3.78	-	0.63	3.78	-	0.63	3.78
MS116-1.0	-	1	6	-	1	6	-	1	6	-	1.0	6.0
MS116-1.6	-	1.6	9.6	-	1.6	9.6	-	1.6	9.6	1/10	1.6	9.6
MS116-2.5	-	2.5	15	1/6	2.5	15	1/6	2.5	15	1/6	2.5	15
MS116-4.0	1/8	4	24	1/4	4	24	1/3	4	24	1/3	4	24
MS116-6.3	1/4	6.3	37.8	1/2	6.3	37.8	1/2	6.3	37.8	1/2	6.3	37.8
MS116-10	1/2	9.8	58.8	1	10	60	1	10	60	1 1/2	10	60
MS116-12	1/2	9.8	58.8	1 1/2	12	72	1 1/2	12	72	2	12	72
MS116-16	1	16	96	2	12	72	2	12	72	2	12	72
MS116-20	1 1/2	20	120	3	19.6	73.6	3	18.7	71	3	17	64
MS116-25	2	24	144	3	19.6	73.6	3	18.7	71	3	17	64
MS116-32	2	24	144	3	19.6	73.6	5	30.8	102	5	28	92

UL/CSA Motor ratings, three phase

hp Horse power
FLA Full load amps
LRA Locked rotor amps

Type	110-120 VAC			200 VAC			208 VAC			220-240 VAC			440-480 VAC			550-600 VAC		
	hp	FLA	LRA	hp	FLA	LRA	hp	FLA	LRA	hp	FLA	LRA	hp	FLA	LRA	hp	FLA	LRA
MS116-0.16	-	0.16	0.96	-	0.16	0.96	-	0.16	0.96	-	0.16	0.96	-	0.16	0.96	-	0.16	0.96
MS116-0.25	-	0.25	1.5	-	0.25	1.5	-	0.25	1.5	-	0.25	1.5	-	0.25	1.5	-	0.25	1.5
MS116-0.4	-	0.4	2.4	-	0.4	2.4	-	0.4	2.4	-	0.4	2.4	-	0.4	2.4	-	0.4	2.4
MS116-0.63	-	0.63	3.78	-	0.63	3.78	-	0.63	3.78	-	0.63	3.78	-	0.63	3.78	-	0.63	3.78
MS116-1.0	-	1.0	6.0	-	1	6	-	1	6	-	1.0	6.0		1.0	6.0	1/2	1	6
MS116-1.6	-	1.6	9.6	-	1.6	9.6	-	1.6	9.6	-	1.6	9.6	3/4	1.6	9.6	3/4	1.6	9.6
MS116-2.5	-	2.5	15.0	1/2	2.5	15	1/2	2.5	15	1/2	2.5	15	1	2.5	15	1 1/2	2.5	15
MS116-4.0	-	4.0	24	3/4	4	24	3/4	4	24	3/4	4	24	2	4	24	3	3.9	25.6
MS116-6.3	1/2	6.3	37.8	1	6.3	37.8	1	6.3	37.8	1 1/2	6.3	37.8	3	4.8	32	5	6.1	36.8
MS116-10	1	10	60	2	7.8	57.5	2	7.5	55	3	9.6	64	5	7.6	46	7 1/2	9	50.8
MS116-12	1 1/2	12	72	3	11	73.6	3	10.6	71	3	9.6	64	7 1/2	11	63.5	10	11	64.8
MS116-16	2	16	84	3	11	73.6	3	10.6	71	5	15.2	92	10	14	81	10	11	64.8
MS116-20	3	19.2	128	5	17.5	105.8	5	16.7	102	5	15.2	92	10	14	81	15	17	93
MS116-25	3	19.2	128	5	17.5	105.8	7 1/2	24.2	140	7 1/2	22	127	15	21	116	20	22	116
MS116-32	5	30.4	184	7 1/2	25.3	146	10	30.8	179	10	28	162	20	27	145	25	27	146

Manual Motor Controller

Type	Manual Motor Controllers / Branch circuit protection, max. size per NEC/CEC (1)		Maximum short-circuit current for motor disconnect (2)		for group installation	
	Fuses A	Circuit breaker A	480 V kA	600 V kA	480 V kA	600 V kA
MS116-0.16	Any listed fuses. Size per NEC/CEC	Any listed UL489 / CSA C22.2 No5 circuit breaker. Size per NEC/CEC	30	5	30	5
MS116-0.25			30	5	30	5
MS116-0.4			30	5	30	5
MS116-0.63			30	5	30	5
MS116-1.0			30	5	30	5
MS116-1.6			30	5	30	5
MS116-2.5			30	5	30	5
MS116-4.0			18	5	18	5
MS116-6.3			18	5	18	5
MS116-10			18	5	18	5
MS116-12			18	5	18	5
MS116-16			18	5	18	5
MS116-20			18	5	18	5
MS116-25			18	5	18	5
MS116-32			18	5	18	5

(1) NEC: NFPA®70 National Electrical Code®; CEC: CSA C22.1 Canadian Electrical Code.
(2) Suitable as motor disconnect with padlock adaptor SA1 or SA3.

UL/CSA Maximum short-circuit current ratings – MS116 with AF contactors

Type	Motor Disconnect, Group Installations, Coordination Type 2			
	480 V		600 V	
	Minimum contactor size	kA	Minimum contactor size	kA
MS116-0.16	AF09-AF16	30	AF09-AF16	5
MS116-0.25	AF09-AF16	30	AF09-AF16	5
MS116-0.4	AF09-AF16	30	AF09-AF16	5
MS116-0.63	AF09-AF16	30	AF09-AF16	5
MS116-1.0	AF09-AF16	30	AF09-AF16	5
MS116-1.6	AF09-AF16	30	AF09-AF16	5
MS116-2.5	AF26-AF38	30	AF16	5
MS116-4.0	AF26-AF38	18	AF16	5
MS116-6.3	AF26-AF38	18	AF26-AF38	5
MS116-10	AF26-AF38	18	AF30-AF38	5
MS116-12	AF26-AF38	18	AF30-AF38	5
MS116-16	AF26-AF38	18	AF40	5
MS116-20	AF26-AF38	18	AF40	5
MS116-25	AF30-AF38	18	AF40	5
MS116-32	AF38	18	AF40	5

NOTE : More coordination tables are available in our SOC (selected optimized coordination) tool: https://applications.it.abb.com/SOC/Motor.

ABB STOTZ-KONTAKT GmbH
Electrification Business
Low Voltage Products and Systems
Eppelheimer Straße 82
D-69123 Heidelberg / Germany
Phone: +49 (0) 6221 7 01-0
Fax: +49 (0) 6221 7 01-13 25
E-Mail: info.desto@de.abb.com

You can find the address of your local sales organization on the ABB home page
https://new.abb.com/low-voltage/products/motor-protection/manual-motor-starter

We reserve the right to make technical changes or modify the contents of this document without prior notice. With regards to purchase orders, the agreed particulars shall prevail. ABB AG does not accept any responsibility whatsoever for potential errors or possible lack of information in this document.

We reserve all rights in this document and in the subject matter and illustrations contained therein. Any reproduction, disclosure to third parties or utilization of its contents – in whole or in parts – is forbidden without prior written consent of ABB AG.

Copyright© 2024 ABB - All rights reserved

2CDC131025D0201 - Rev B (02.2024)