# Technical data sheet
# Throughbeam photoelectric sensor receiver
Part no.: 50116847
LE318B/4P-M12



For Illustration purposes only

**Contents**


- Technical data
- Dimensioned drawings
- Electrical connection
- Diagrams
- Operation and display
- Suitable transmitters
- Part number code
- Notes
- Further information
- Accessories

# Technical data

## Basic data

| | |
|---|---|
| **Series** | 318B |
| **Operating principle** | Throughbeam principle |
| **Device type** | Receiver |

## Optical data

| | |
|---|---|
| **Operating range** | 0 ... 10 m |
| **Operating range** | Guaranteed operating range |
| **Operating range limit** | 0 ... 15 m |
| **Operating range limit** | Typical operating range |

## Electrical data

| | |
|---|---|
| **Protective circuit** | Polarity reversal protection |
| | Short circuit protected |

### Performance data

| | |
|---|---|
| **Supply voltage $U_B$** | 10 ... 30 V, DC, Incl. residual ripple |
| **Residual ripple** | 0 ... 15 %, From $U_B$ |
| **Open-circuit current** | 0 ... 15 mA |

### Outputs

| | |
|---|---|
| **Number of digital switching outputs** | 2 Piece(s) |

#### Switching outputs

| | |
|---|---|
| **Voltage type** | DC |
| **Switching current, max.** | 100 mA |
| **Switching voltage** | high: ≥($U_B$-2V) |
| | low: ≤ 2 V |

##### Switching output 1

| | |
|---|---|
| **Assignment** | Connection 1, pin 4 |
| **Switching element** | Transistor, PNP |
| **Switching principle** | Light switching |

##### Switching output 2

| | |
|---|---|
| **Assignment** | Connection 1, pin 2 |
| **Switching element** | Transistor, PNP |
| **Switching principle** | Dark switching |

## Time behavior

| | |
|---|---|
| **Switching frequency** | 500 Hz |
| **Response time** | 1 ms |
| **Readiness delay** | 300 ms |

## Connection

### Connection 1

| | |
|---|---|
| **Function** | Signal OUT |
| | Voltage supply |
| **Type of connection** | Connector |
| **Thread size** | M12 |
| **Type** | Male |
| **Material** | Plastic |
| **No. of pins** | 4 -pin |
| **Encoding** | A-coded |

## Mechanical data

| | |
|---|---|
| **Dimension (Ø x L)** | 18 mm x 46 mm |
| **Thread size** | M18 x 1 mm |
| **Housing material** | Plastic |
| **Plastic housing** | ABS |
| **Lens cover material** | Plastic |
| **Net weight** | 20 g |
| **Housing color** | Black |
| | Red |

## Operation and display

| | |
|---|---|
| **Type of display** | LED |
| **Number of LEDs** | 1 Piece(s) |

## Environmental data

| | |
|---|---|
| **Ambient temperature, operation** | -40 ... 60 °C |
| **Ambient temperature, storage** | -40 ... 70 °C |

## Certifications

| | |
|---|---|
| **Degree of protection** | IP 67 |
| **Protection class** | III |
| **Approvals** | c UL US |
| **Standards applied** | IEC 60947-5-2 |

## Classification

| | |
|---|---|
| **Customs tariff number** | 85365019 |
| **ECLASS 5.1.4** | 27270901 |
| **ECLASS 8.0** | 27270901 |
| **ECLASS 9.0** | 27270901 |
| **ECLASS 10.0** | 27270901 |
| **ECLASS 11.0** | 27270901 |
| **ECLASS 12.0** | 27270901 |
| **ECLASS 13.0** | 27270901 |
| **ECLASS 14.0** | 27270901 |
| **ECLASS 15.0** | 27270901 |
| **ETIM 5.0** | EC002716 |
| **ETIM 6.0** | EC002716 |
| **ETIM 7.0** | EC002716 |
| **ETIM 8.0** | EC002716 |
| **ETIM 9.0** | EC002716 |
| **ETIM 10.0** | EC002716 |

# Dimensioned drawings

All dimensions in millimeters

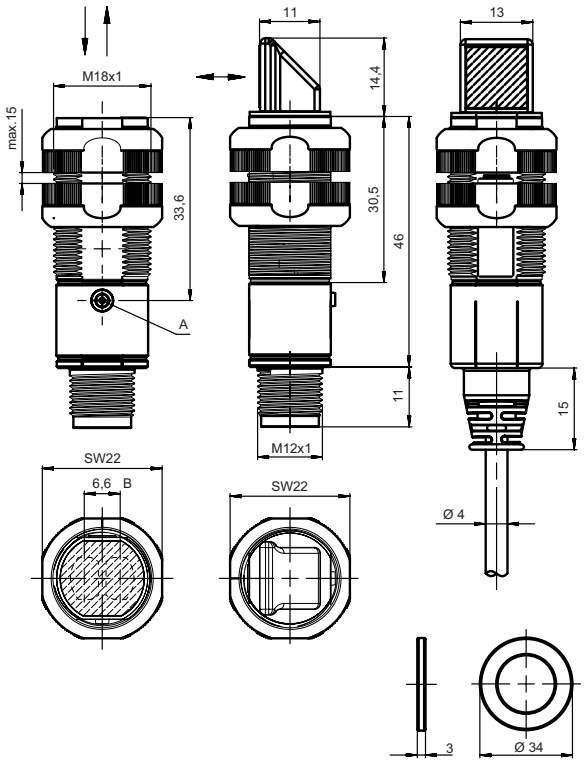


B Optical axis
A Indicator diode

# Electrical connection

## Connection 1

| | |
|---|---|
| **Function** | Signal OUT |
| | Voltage supply |
| **Type of connection** | Connector |
| **Thread size** | M12 |
| **Type** | Male |
| **Material** | Plastic |
| **No. of pins** | 4 -pin |
| **Encoding** | A-coded |

| Pin | Pin assignment |
|---|---|
| **1** | V+ |
| **2** | OUT 2 |
| **3** | GND |
| **4** | OUT 1 |

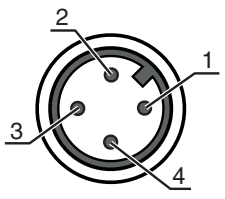

# Diagrams

## Typ. response behavior

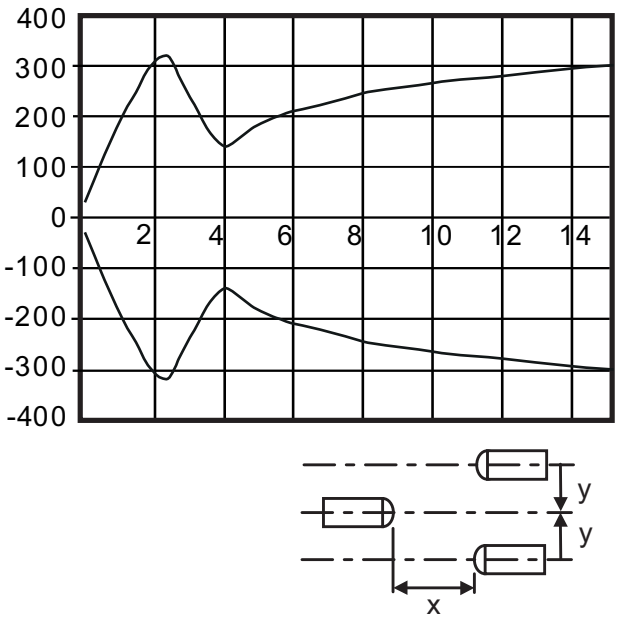


x Distance [m]
y Misalignment [mm]

Axial

# Operation and display

| LED | Display | Meaning |
|---|---|---|
| 1 | Green, continuous light | Operational readiness |
| | Yellow, continuous light | Light path free |
| | Yellow, flashing | No function reserve |

# Suitable transmitters

| | Part no. | Designation | Article | Description |
|---|---|---|---|---|
|  | 50126605 | LS318B.Y1 | Throughbeam photoelectric sensor transmitter | Special version: Deactivation input, Small light spot (S)<br>Operating range limit: 0 ... 14.2 m<br>Light source: LED, Red<br>Supply voltage: DC<br>Deactivation inputs: 2 Piece(s)<br>Connection: Connector, M12, Plastic, 4 -pin |
|  | 50116853 | LS318B/9D-M12 | Throughbeam photoelectric sensor transmitter | Special version: Deactivation input<br>Operating range limit: 0 ... 15 m<br>Light source: LED, Red<br>Supply voltage: DC<br>Deactivation inputs: 2 Piece(s)<br>Connection: Connector, M12, Plastic, 4 -pin |
|  | 50129507 | LS318BI/9D-M12 | Throughbeam photoelectric sensor transmitter | Special version: Deactivation input<br>Operating range limit: 0 ... 23 m<br>Light source: LED, Infrared<br>Supply voltage: DC<br>Deactivation inputs: 2 Piece(s)<br>Connection: Connector, M12, Plastic, 4 -pin |

# Part number code

Part designation: **XXX318BY-AAAF.BB/CC-DDD**

| | |
|---|---|
| **XXX318B** | **Operating principle**<br>PRK: Retro-reflective photoelectric sensor with polarization filter<br>ET: energetic diffuse reflection sensor<br>FT: diffuse reflection sensor with fading<br>LE: Throughbeam photoelectric sensor receiver<br>LS: throughbeam photoelectric sensor transmitter |
| **Y** | **Light type**<br>n/a: red light<br>I: infrared light |
| **AAAF** | **Preset range (optional)**<br>n/a: operating range acc. to data sheet<br>xxxF: Preset range [mm] |
| **BB** | **Equipment**<br>n/a: axial optics<br>W: 90° angular optics<br>3: teach-in via button<br>X: reinforced fading |
| **CC** | **Switching output / function (OUT1 = pin 4, OUT2 = pin 2):**<br>4: PNP transistor output, light switching<br>P: PNP transistor output, dark switching<br>2: NPN transistor output, light switching<br>N: NPN transistor output, dark switching<br>9: input for transmitter deactivation (deactivation with HIGH signal)<br>D: Input for transmitter deactivation (deactivation with LOW signal)<br>X: pin not used |
| **DDD** | **Electrical connection**<br>n/a: cable, standard length 2000 mm, 4-wire<br>M12: M12 connector, 4-pin (plug)<br>5000: cable, standard length 5000 mm, 4-wire<br>200-M12: cable, length 200 mm with M12 connector, 4-pin, axial (plug) |

**Note**

- A list with all available device types can be found on the Leuze website at www.leuze.com.

# Notes

**Observe intended use!**

- This product is not a safety sensor and is not intended as personnel protection.
- The product may only be put into operation by competent persons.
- Only use the product in accordance with its intended use.

**For UL applications:**

- For UL applications, use is only permitted in Class 2 circuits in accordance with the NEC (National Electric Code).
- These proximity switches shall be used with UL Listed Cable assemblies rated 30V, 0.5A min, in the field installation, or equivalent (categories: CYJV/CYJV7 or PVVA/PVVA7)

# Further information

- Sum of the output currents for both outputs, 50 mA for ambient temperatures > 40 °C

# Accessories

## Connection technology - Connection cables

| | Part no. | Designation | Article | Description |
|---|---|---|---|---|
|  | 50130652 | KD U-M12-4A-V1-050 | Connection cable | Connection 1: Connector, M12, Axial, Female, A-coded, 4 -pin<br>Connector, LED: No<br>Connection 2: Open end<br>Shielded: No<br>Cable length: 5.000 mm<br>Sheathing material: PVC |
|  | 50130690 | KD U-M12-4W-V1-050 | Connection cable | Connection 1: Connector, M12, Angled, Female, A-coded, 4 -pin<br>Connector, LED: No<br>Connection 2: Open end<br>Shielded: No<br>Cable length: 5.000 mm<br>Sheathing material: PVC |

## Mounting technology - Mounting brackets

| | Part no. | Designation | Article | Description |
|---|---|---|---|---|
|  | 50113548 | BT D18M.5 | Mounting bracket | Diameter, inner: 18 mm<br>Design of mounting device: Angle, L-shape<br>Fastening, at system: Through-hole mounting<br>Mounting bracket, at device: Screw type<br>Type of mounting device: Rigid<br>Material: Stainless steel |

## Mounting technology - Rod mounts

| | Part no. | Designation | Article | Description |
|---|---|---|---|---|
|  | 50117490 | BTU D18M-D12 | Mounting system | Design of mounting device: Mounting system<br>Fastening, at system: Through-hole mounting<br>Mounting bracket, at device: Screw type<br>Type of mounting device: Clampable, Adjustable, Turning, 360°<br>Material: Metal |

## Mounting technology - Other

| | Part no. | Designation | Article | Description |
|---|---|---|---|---|
|  | 50117258 | BT 318P-LS | Fastening | Design of mounting device: Mounting clamp<br>Fastening, at system: Through-hole mounting<br>Mounting bracket, at device: Clampable<br>Type of mounting device: Rigid<br>Material: Plastic<br>Shock absorber: No |
|  | 50121904 ** | BT318B-OM | Fastening | Design of mounting device: Mounting clamp<br>Fastening, at system: Through-hole mounting<br>Mounting bracket, at device: Screw type<br>Type of mounting device: Swiveling, Adjustable, Turning<br>Material: Plastic<br>Shock absorber: No |

** Included in delivery contents

# Accessories

| | Note |
|---|---|
|  | A list with all available accessories can be found on the Leuze website in the Download tab of the article detailed page. |