Panel Terminal Screw Head 4mm Socket Black/Red

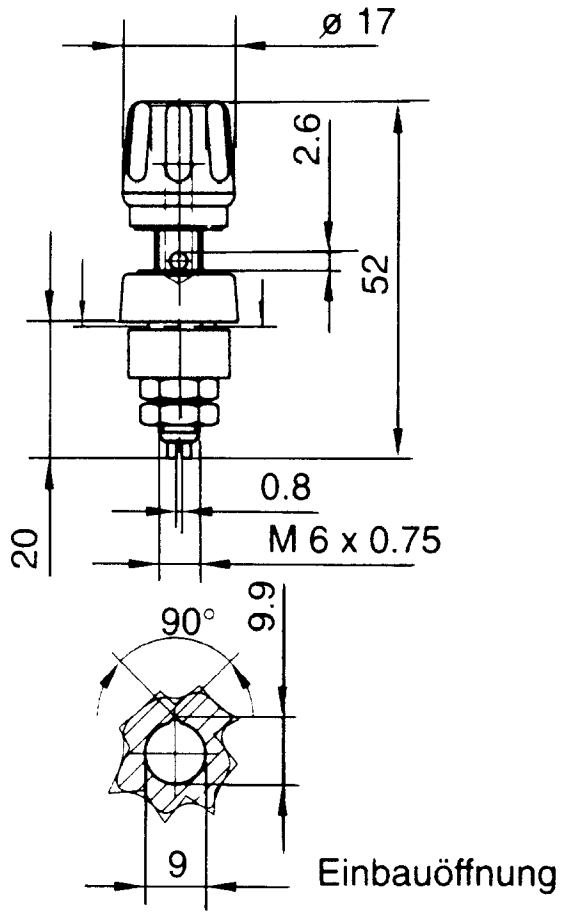

Pole terminal with claw edge, captive insulated head and insulating ring. 4 mm diameter nickel-plated brass threaded bolt with 2.6 mm diameter transverse hole. For insulated non-rotating installation in equipment chassis and switchpanels up to 3.5 mm wall thickness.

60 V DC
63 A
2 mΩ
-25°C ... +100°C
M 6 Gewinde
M 6 thread
Filetage M 6