

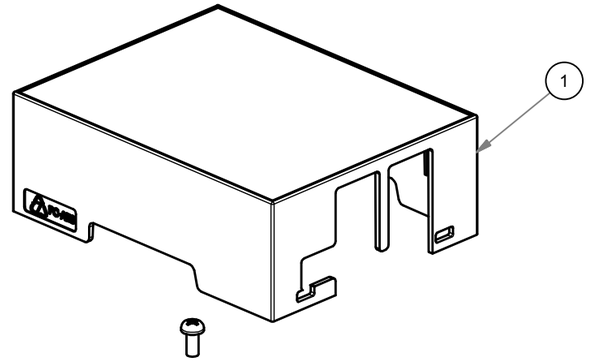

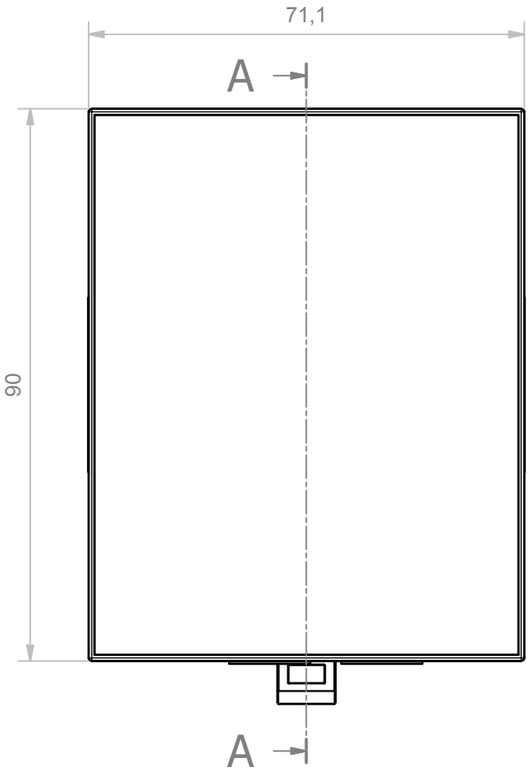

A-A (1 : 1)

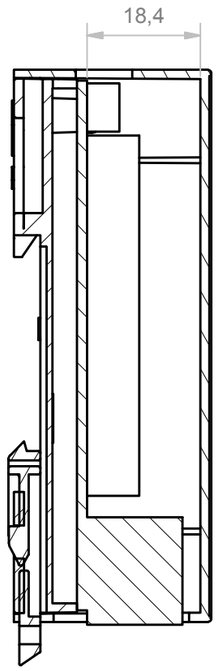

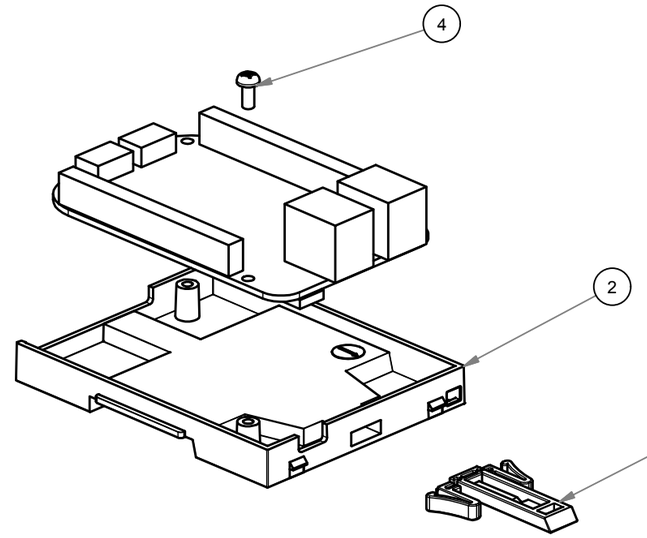

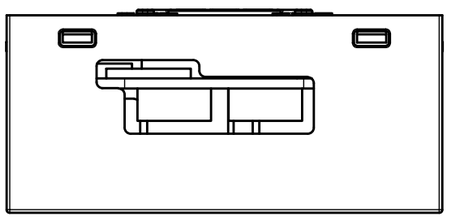

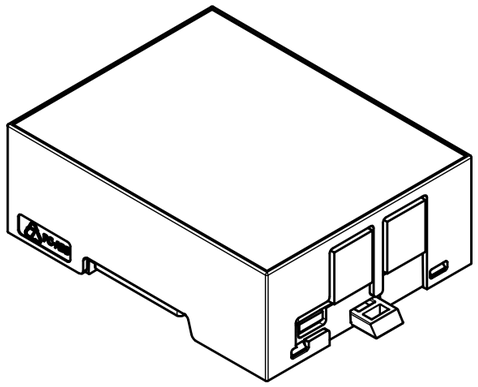

RIF.	Q.TY	DESCRIPTION	DRAWING
1	1	BODY 4M XTS COMPACT BEAGLEBONE GREEN WIRELESS	2.050.00016
2	1	BASE 4M XT BEAGLEBONE	1.001.05203
3	1	MODULAR HOOK LONG	1.001.01900
4	2	SCREW 2.9 X 6.5 TRUNC	8.100.00003

General Tolerance UNI EN 22768/1 Media (m)				
from 0.5 to 3	from 3 to 6	from 6 to 30	from 30 to 120	from 120 to 400
± 0.1	± 0.1	± 0.2	± 0.3	± 0.5

Scale:	Sheet nr.:	Drawed:	Checked:	Date:	Revision description
1 : 1	1 / 1	N.R.	F.F.	21/03/2018	
Dimension in mm	Material:		Weight: -	Cod. Mold: --	

italtronic enclosures for electronics
Hitaltech A group of connecting technologies

Description:
CONTENITORE COMPLETO 4M XTS COMPACT BEAGLEBONE GREEN WIRELESS
COMPLETE ENCLOSURE 4M XTS COMPACT BEAGLEBONE GREEN WIRELESS

Drawing nr. 3.050.00010 | Rev. 00

RESERVED PROPERTY: The present drawing cannot be reproduced or comunicated to 3d parties, even partially, without the authorization of ITALTRONIC Srl. Italtronic reserves to protect its own rights according to the law.