

Light element, LED, blue, front mount, 85-264VAC, screw connection

Part no. M22-LED230-B
Article no. 218059
Catalog No. M22-LED230-BQ

Delivery programme

Product range			RMQ-Titan (drilling dimensions 22.5 mm)
Basic function			LED elements
Single unit/Complete unit			Single unit
Fixing			Front fixing
Connection technique			Screw terminals
Rated operational voltage	U_e	V	85 - 264 V AC, 50/60 Hz
Rated operational current	I_e	mA	5 - 15
Power consumption	$P_{max.}$	W	0.33
			At 230 V
Colour			
			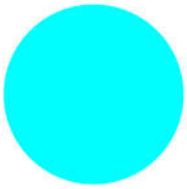
			Blue
Degree of Protection			IP20
Connection to SmartWire-DT			no

Notes

Bei Leuchtmeldern, Leuchtdrucktasten und Leuchtwahltasten gilt:

M22…-R nur in Kombination mit M22-LED…-R

M22…-G nur in Kombination mit M22-LED…-G

M22…-W nur in Kombination mit M22-LED…-W

M22…-Y nur in Kombination mit M22-LED…-W

M22…-B in Kombination mit M22-LED…-W oder M22-LED…-B

Technical data

General

Standards			IEC/EN 60947 VDE 0660
Operating torque (screw terminals)		Nm	0.8
Climatic proofing			Damp heat, constant, to IEC 60068-2-78 Damp heat, cyclic, to IEC 60068-2-30
Ambient temperature			
Open		°C	-25 - +70 - > 200 V AC/60 Hz: -25/+55 °C
Storage		°C	- 40 - + 80
Mounting position			As required
Mechanical shock resistance		g	30 Shock duration 11 ms Sinusoidal according to IEC 60068-2-27
Terminal capacities		mm^2	
Solid		mm^2	0.75 - 2.5
Stranded		mm^2	0.5 - 2.5

Contacts

Rated impulse withstand voltage	U_{imp}	V AC	6000
Rated insulation voltage	U_i	V	500
Overvoltage category/pollution degree			III/3
Indoor and protected outdoor installation			

Design verification as per IEC/EN 61439

Technical data for design verification			
Rated operational current for specified heat dissipation	I_n	A	0
Heat dissipation per pole, current-dependent	P_{vid}	W	0
Equipment heat dissipation, current-dependent	P_{vid}	W	0
Static heat dissipation, non-current-dependent	P_{vs}	W	1
Heat dissipation capacity	P_{diss}	W	0
Operating ambient temperature min.		°C	-25
Operating ambient temperature max.		°C	70
IEC/EN 61439 design verification			
10.2 Strength of materials and parts			
10.2.2 Corrosion resistance			Meets the product standard's requirements.
10.2.3.1 Verification of thermal stability of enclosures			Meets the product standard's requirements.
10.2.3.2 Verification of resistance of insulating materials to normal heat			Meets the product standard's requirements.
10.2.3.3 Verification of resistance of insulating materials to abnormal heat and fire due to internal electric effects			Meets the product standard's requirements.
10.2.4 Resistance to ultra-violet (UV) radiation			Meets the product standard's requirements.
10.2.5 Lifting			Does not apply, since the entire switchgear needs to be evaluated.
10.2.6 Mechanical impact			Does not apply, since the entire switchgear needs to be evaluated.
10.2.7 Inscriptions			Meets the product standard's requirements.
10.3 Degree of protection of ASSEMBLIES			Does not apply, since the entire switchgear needs to be evaluated.
10.4 Clearances and creepage distances			Meets the product standard's requirements.
10.5 Protection against electric shock			Does not apply, since the entire switchgear needs to be evaluated.
10.6 Incorporation of switching devices and components			Does not apply, since the entire switchgear needs to be evaluated.
10.7 Internal electrical circuits and connections			Is the panel builder's responsibility.
10.8 Connections for external conductors			Is the panel builder's responsibility.
10.9 Insulation properties			
10.9.2 Power-frequency electric strength			Is the panel builder's responsibility.
10.9.3 Impulse withstand voltage			Is the panel builder's responsibility.
10.9.4 Testing of enclosures made of insulating material			Is the panel builder's responsibility.
10.10 Temperature rise			The panel builder is responsible for the temperature rise calculation. Eaton will provide heat dissipation data for the devices.
10.11 Short-circuit rating			Is the panel builder's responsibility. The specifications for the switchgear must be observed.
10.12 Electromagnetic compatibility			Is the panel builder's responsibility. The specifications for the switchgear must be observed.
10.13 Mechanical function			The device meets the requirements, provided the information in the instruction leaflet (IL) is observed.

Technical data ETIM 6.0

Low-voltage industrial components (EG000017) / Lamp holder block for control circuit devices (EC000204)			
Electric engineering, automation, process control engineering / Low-voltage switch technology / Command and alarm device / Bulb socket block for command and alarm devices (ecl@ss8.1-27-37-12-09 [AKF027011])			
With integrated transformer			No
With integrated voltage decreasing resistor			No
With integrated lamp			Yes
With integrated diode			Yes
Lamp holder			None
Rated voltage Ue at AC 50 Hz		V	85 - 264
Rated voltage Ue at AC 60 Hz		V	85 - 264
Rated voltage Ue at DC		V	0 - 0

Voltage type for actuating	AC
Type of lamp	LED
Connection type auxiliary circuit	Screw connection
Colour lamp	Blue
Type of fastening	Front fastening

Approvals

	IEC/EN 60947-5; UL 508; CSA-C22.2 No. 14-05; CSA-C22.2 No. 94-91; CE marking
	E29184
	NKCR
	012528
	3211-03
	UL listed, CSA certified
	UL/CSA Type: -

Dimensions

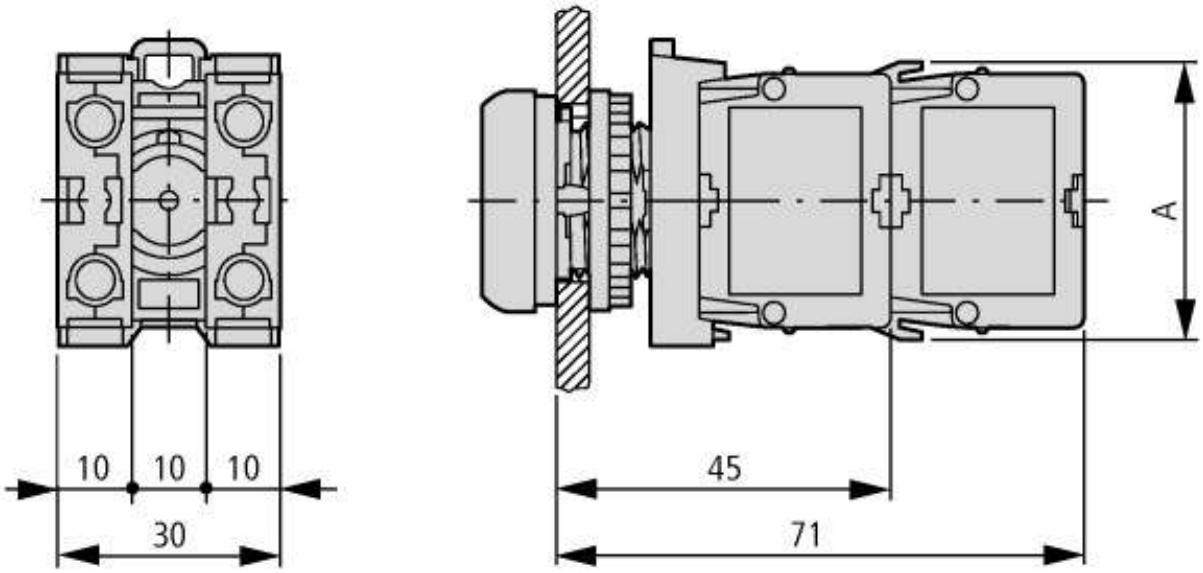

A = 37.2

Pushbutton with M22-(C)K…
Pushbutton with M22-(C) LED… + M22-XLED…

Additional product information (links)

IL04716002Z (AWA1160-1745) RMQ-Titan System

IL04716002Z (AWA1160-1745) RMQ-Titan System	ftp://ftp.moeller.net/DOCUMENTATION/AWA_INSTRUCTIONS/IL04716002Z2015_02.pdf

© 03/2016 by Eaton Industries GmbH