

Model Number

NMB5-12GM65-E2-V1

Features

- **5 mm flush**
- **Stainless steel sensing face**
- **Increased operating distance**

Accessories

V1-G-2M-PUR
Female cordset, M12, 4-pin, PUR cable

V1-W-2M-PUR
Female cordset, M12, 4-pin, PUR cable

AB-12
Mounting aid

Technical Data

General specifications		
Switching function		Normally open (NO)
Output type		PNP
Rated operating distance	s_n	5 mm
Installation		flush (Requirements: see drawing below)
Output polarity		DC
Assured operating distance	s_a	0 ... 4.05 mm
Actuating element		Ferrous and nonferrous targets
Reduction factor r_{Al}		0.3
Reduction factor r_{Cu}		0.2
Reduction factor r_{304}		0.85
Reduction factor r_{St37}		1
Output type		3-wire
Nominal ratings		
Operating voltage	U_B	10 ... 30 V DC
Switching frequency	f	0 ... 360 Hz
Hysteresis	H	3 ... 15 typ. 5 %
Reverse polarity protection		reverse polarity protected
Short-circuit protection		pulsing
Voltage drop	U_d	≤ 2 V DC
Operating current	I_L	≤ 200 mA
Off-state current	I_r	≤ 10 µA
No-load supply current	I_0	≤ 15 mA
Operating voltage indicator		LED, green
Switching state indicator		LED, yellow
Functional safety related parameters		
$MTTF_d$		880 a
Mission Time (T_M)		20 a
Diagnostic Coverage (DC)		0 %
Ambient conditions		
Ambient temperature		-25 ... 70 °C (-13 ... 158 °F)
Mechanical specifications		
Connection type		Connector M12 x 1 , 4-pin
Housing material		Stainless steel 1.4305 / AISI 303
Sensing face		Stainless steel 1.4305 / AISI 303
Degree of protection		IP67 / IP68 / IP69K - cordset dependent according to cable specification
Compliance with standards and directives		
Standard conformity		
Standards		EN 60947-5-2:2007 IEC 60947-5-2:2007
Approvals and certificates		
UL approval		cULus Listed, General Purpose
CSA approval		cCSAus Listed, General Purpose
CCC approval		CCC approval / marking not required for products rated ≤36 V

Dimensions

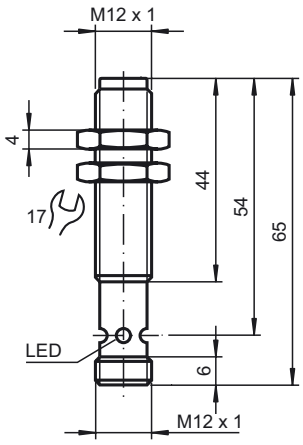

Electrical Connection

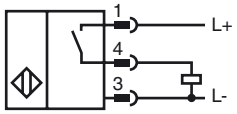

Release date: 2017-07-19 16:41 Date of issue: 2017-07-19 911269_eng.xml

Pinout

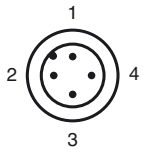

Wire colors in accordance with EN 60947-5-2

1	BN	(brown)
2	WH	(white)
3	BU	(blue)
4	BK	(black)

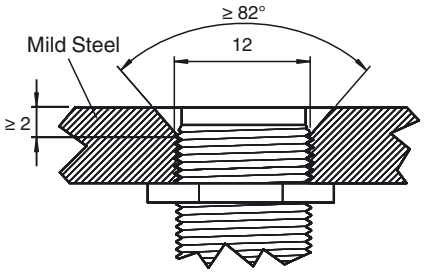

Sensor face is flush with mounting surface.

Release date: 2017-07-19 16:41 Date of issue: 2017-07-19 911269_eng.xml

Refer to “General Notes Relating to Pepperl+Fuchs Product Information”.
Pepperl+Fuchs Group www.pepperl-fuchs.com
USA: +1 330 486 0001 fa-info@us.pepperl-fuchs.com
Germany: +49 621 776 4411 fa-info@de.pepperl-fuchs.com
Singapore: +65 6779 9091 fa-info@sg.pepperl-fuchs.com
PEPPERL+FUCHS SENSING YOUR NEEDS