Brand of NTN corporation

Technical data

UCPG212

Bearing units



KIT CONTENT

UC212G2, PG212

VISUAL (S)

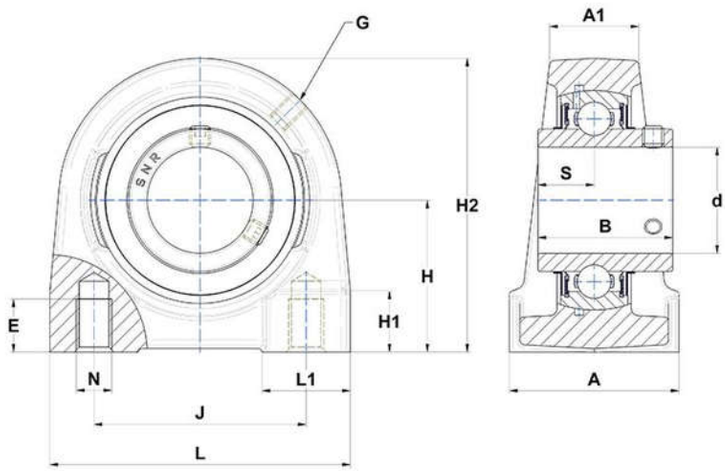

PRODUCT DEFINITION

Brand	SNR
A - Housing width	70 mm
A1 - Housing top width	40 mm
B - Width of Inner Ring	65,1 mm
d - Shaft diameter	60 mm
E - Mounting hole thread depth	25 mm
G - Grease fitting	M6x1

NTN Europe
1 rue des Usines · BP 2017 · 74010 Annecy Cedex · France · Tel. +33 (0)4 50 65 30 00
S.A. au capital de 322 639 919 € · RCS ANNECY B 325 821 072 · Id. Fiscale : FR 48 325 821 072
SIRET 325 821 072 00015 · Code APE 2815 Z · Code NACE 28.15

PRODUCT DEFINITION	
H - Distance mounting base to centerline spheric. seating diam.	69,8 mm
H1 - Housing foot height	25 mm
H2 - Housing height	138 mm
J - Mounting holes distance	105 mm
L - Housing length	150 mm
L1 - Housing foot length	50 mm
N - Mounting hole dimension	M16
S - Distance front side/bearing centre	25,4 mm

PRODUCT PERFORMANCE	
C - Dynamic load rating	52500000 mN
C0 - Static load rating	32800000 mN
Operating temperature min.	253,15 °K
Operating temperature max.	373,15 °K

OTHER FEATURES	
Mass	4,63 kg
Recommended tightening torque for set screw	22 N-m