Control Stations ø 22

CONTROL STATIONS - NON-ILLUMINATED

Technical Info (p. 103)

MUSHROOM HEAD Ø 40 EN 418 / ISO 13850 — Push-pull to reset



LBX15101

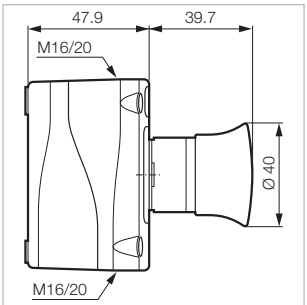

Compliant with the requirements of emergency stop:
EN 418 / ISO 13850

● Red	NC	EMERGENCY STOP		**LBX15301**
● Red	NC + NO	EMERGENCY STOP		**LBX15311**
● Red	2 NC	EMERGENCY STOP		**LBX15302**

For contact blocks attached to operator please contact us.

MUSHROOM HEAD Ø 40 EN 418 / ISO 13850 — Key to reset — Part Number



LBX11302

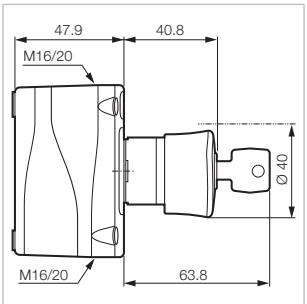

Compliant with the requirements of emergency stop:
EN 418 / ISO 13850
Supplied with 2 keys profile n° 455

● Red	NC	EMERGENCY STOP		**LBX11301**
● Red	NC + NO	EMERGENCY STOP		**LBX11311**
● Red	2 NC	EMERGENCY STOP		**LBX11302**

For contact blocks attached to operator please contact us.

MUSHROOM HEAD Ø 54 EN 418 / ISO 13850 — Push-pull to reset with flag indicator — Part Number



LBX14201

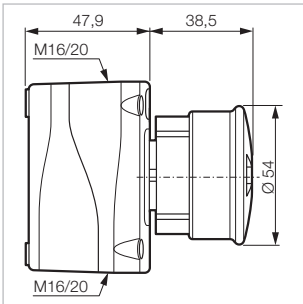

Compliant with the requirements of emergency stop:
EN 418 / ISO 13850
Double position indicator: head and collar

● Red	NC	◎ - Ⓘ		**LBX14101**
● Red	NC + NO	◎ - Ⓘ		**LBX14111**
● Red	2 NC	◎ - Ⓘ		**LBX14102**
● Red	NC	STOP - Ⓘ		**LBX14201**
● Red	NC + NO	STOP - Ⓘ		**LBX14211**
● Red	2 NC	STOP - Ⓘ		**LBX14202**

For contact blocks attached to operator please contact us.