FEMALE END VIEW

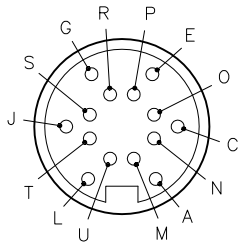

M16 connector

SPECIFICATIONS

CONTACT CARRIER MATERIAL	NYLON
CONTACT MATERIAL/PLATING	COPPER ALLOY/GOLD
HOUSING MATERIAL	NYLON
COUPLING NUT MATERIAL/PLATING	BRASS/BLACK CHROMIUM
RATED CURRENT [A]	3.0 A
RATED VOLTAGE [V]	60 V AC/DC
TEMPERATURE RANGE	−30°C to +95°C [−22°F to +203°F]
PROTECTION CLASS	MEETS IEC IP67
CABLE GLAND	PG 9 – ACCEPTS 6–8mm CABLE
TERMINATION TYPE	SOLDER CUP
MAX. CONDUCTOR SIZE	24 AWG

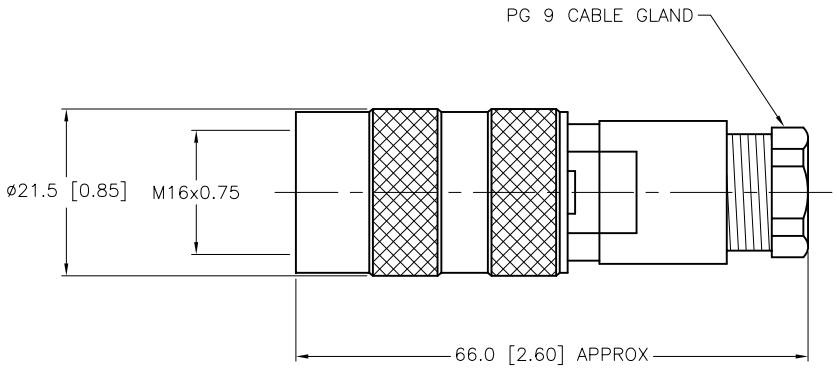

SOURCE DRAWING - FOR REFERENCE ONLY

REV	DESCRIPTION	BY	DATE	ECO NO.
B	DRAWING PROCESSED AS PART OF ECO 39020	KMY	06/08/12	39020

RELATED DOCUMENTS
1.
2.
3.
4.

3RD ANGLE PROJECTION

THIS DRAWING IS CONFIDENTIAL AND THE PROPERTY OF TURCK INC. USE OF THIS DOCUMENT WITHOUT WRITTEN PERMISSION IS PROHIBITED.

TURCK INC
High Technology Sensors and Automation Controls
3000 CAMPUS DRIVE
MINNEAPOLIS, MN 55441
1−800−544−7769
(763) 553−7300
(763) 553−0708 fax
turck.com

MATERIAL

FINISH

ALL DIMENSIONS DISPLAYED ON THIS DRAWING ARE FOR REFERENCE ONLY

CONTACT TURCK FOR MORE INFORMATION

DRFT RDS | DATE 03/31/06

APVD | SCALE 1=1.0

UNIT OF MEASUREMENT
MILLIMETER [INCH]
DO NOT SCALE THIS DRAWING

DESCRIPTION
BK 14−0

IDENTIFICATION NO.
U2−07158

REV
B

FILE: U2−07158

SHEET 1 OF 1

Approved 06/08/2012, work order #29648 by M.B.