RMS002

Draw wire encoder

DRAW WIRE ENCODER

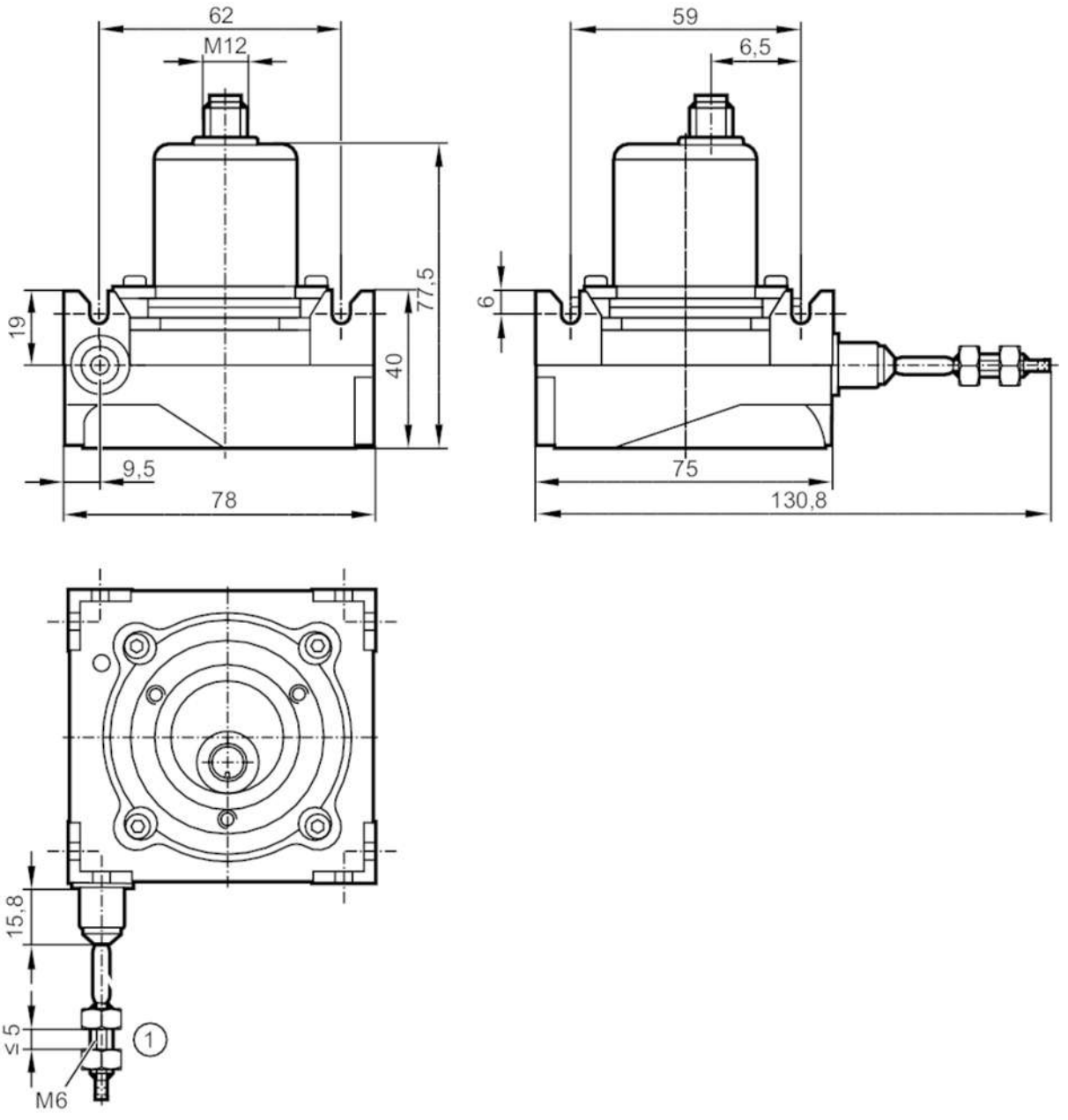

1 threaded bolt M6x20

Product characteristics		
Resolution		8192 steps; 16 revolutions; 17 bit
Application		
Function principle		absolute
Detection system		magnetic
Application		encoder
Electrical data		
Operating voltage	[V]	8...32 DC
Current consumption	[mA]	< 20

RMS002

Draw wire encoder

DRAW WIRE ENCODER

Protection class		III	
Reverse polarity protection		yes	
Max. power-on delay time	[ms]	500	
Settling time	[ms]	32	
Inputs / outputs			
Number of inputs and outputs		Number of analogue outputs: 1	
Outputs			
Number of analogue outputs		1	
Analogue current output	[mA]	4...20	
Max. load	[Ω]	500	
Precision analogue output	[%]	0,1	
Measuring/setting range			
Resolution		8192 steps; 16 revolutions; 17 bit	
Accuracy / deviations			
Accuracy		± 0.012 % FSO	
Repeatability		± 0,005 % FSO	
Software / programming			
Parameter setting options		start position; end position; central position	
Operating conditions			
Ambient temperature	[°C]	-40...80	
Storage temperature	[°C]	-40...80	
Max. relative air humidity	[%]	95; (condensation not permissible)	
Protection		IP 64; (on the housing: IP 65)	
Tests / approvals			
MTTF	[years]	241	
Mechanical data			
Weight	[g]	696	
Materials		housing: steel; wire drum: diecast zinc / plastic; wire: stainless steel polyamide coated	
Max. measuring length	[mm]	3000	
Wire drum circumference	[mm]	200	
Wire diameter	[mm]	0.87	
Wire connection		threaded bolt M6x20; eyelet Ø 2 mm	
Wire properties		max. speed of wire displacement	[m /s]	0,8
		max. wire acceleration	[g]	1
		max. extension force	[N]	3
		max. retraction force	[N]	2,5

RMS002

Draw wire encoder

DRAW WIRE ENCODER

Electrical connection

Connector: 1 x M12, for axial use; coding: A

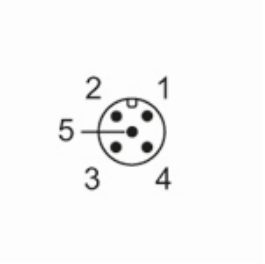

1 L+
2 analogue output
3 L-
4 Set2
5 Set1