TECHNICAL DATA SHEET

The Beacon array incorporates 48 extra bright, long life LED's, giving 360 degree light output around the vertical axis. The LEDA unit incorporates two Piezo Buzzers in the base of the unit, creating a combined audible and visual warning device. The Buzzers on the DC version only can be controlled independently of the light.

Part Code:	Voltage:	Light Source:	Current:				
			01	02	03	04	05
LEDD125-02	24v DC ---	48 LEDs	170 mA	170 mA	170 mA	170 mA	170 mA
LEDD125-03	115v AC ~	48 LEDs	80 mA	80 mA	80 mA	80 mA	80 mA
LEDD125-04	230v AC ~	48 LEDs	40 mA	40 mA	40 mA	40 mA	40 mA
LEDA125-02	24v DC ---	48 LEDs	170 mA	170 mA	170 mA	170 mA	170 mA
LEDA125-03	115v AC ~	48 LEDs	80 mA	80 mA	80 mA	80 mA	80 mA
LEDA125-04	230v AC ~	48 LEDs	40 mA	40 mA	40 mA	40 mA	40 mA

Note: **01**=Amber, **02**=Red, **03**=Blue, **04**=Green and **05**=Clear

LEDA125 - Supplied pre-set to Standard Flash and Buzzers synchronised to the flash rate (Switch postion 3 ON, all other positions OFF) **LEDD125** - Supplied pre-set to Standard Flash (Switch position 3 ON, all other positions OFF)

Key Features Include:

Note: No 'loop in' 'loop out' terminals are provided, so for daisy chain applications the combined wire size must not exceed 2.5mm^2

- Ingress Protection Rating: IP65
- Operating Temperature Range: -20 +55
- Enclosure Materials: UV Stable Polycarbonate Lens. UV Stable ABS Base
- Buzzer Frequency: 3.1kHz +/- 500Hz
- Audibility: 90 dBA +/- 3 @ 1 Metre
  (Note: This feature adds an additional 20mA to the running current when activated)
- AC Supply: 50/60 Hz

Cabling Details:

Will accept shrouded cable up to 7mm in diameter
Maximum 1.5mm^2 (14 – 22 AWG) stranded core with 4mm cut back

Optional Equipment:

- 50003 - Cage Guard (fixings supplied)
  Note: Guard cannot be used in conjunction with bracket
- 50007 - Right Angled Wall Bracket

MOFLASH SIGNALLING

INSTALLATION & TECHNICAL INFORMATION

PLEASE READ PRIOR TO INSTALLATION



LEDD125 & LEDA125 Series - (LED Array)

VISUAL & AUDIBLE COMBINATION SIGNALLING DEVICES

APPROVALS AND CONFORMITIES

Website: www.moflash.com **Email: technical@moflash.co.uk**

INSTALLATION DATA SHEET

24vDC Beacon Installation

Remove the 3 x M3 screws and base plate away from the base of the Beacon. Pierce the cable grommet and insert power cable & possible control cables through the grommet, pulling back slightly (around 10mm) to allow the grommet to form a weatherproof seal. See **Diagram 2** on sample method for feeding cables through the grommet and PCB for final termination into the three way Terminal Block.

For standard operation (LEDD), connect power to 0v & +Vin on the three way Terminal Block located on the PCB. **See Picture 1:**

To enable the remote operation of the Buzzers & LED's (LEDA only), connect supply (+Vin) via a remote switch to the terminal marked 'Signal' on the PCB. **See Diagram 1:**

115v & 230vAC Beacon Installation

Please follow the procedure shown above from 24vDC for 115v & 230vAC Installations. However, please note that these units are supplied as a synchronous audible / visual signal only and the buzzers cannot be operated independently of the light.

Operational modes for LEDD and LEDA (Audible) Beacons

To access the 4 way DIP switch **(See Picture 2)**, it will be necessary to remove the Beacon Lens.

(Note: Ensure power to the Beacon is off when changing the functionality of the Beacon)

Flash Type	FPM (Flashes Per Minute)	Switch Position
Standard Flash	60	3=ON, 4=OFF
Double Flash	130	3=OFF, 4=ON
Rapid Flash	190	3=ON, 4=ON
Static Mode	No Flash	3=OFF, 4=OFF
Buzzer (LEDA only)	N/A	1=OFF - Buzzer Synchronised to LED's 1=ON - Buzzer in Steady Mode
LED Output	N/A	2=OFF - Flashing LED's 2=ON - Constant LED's

General Installation Notes

- The DC supply must be fully rectified and smoothed. If not, suppression will be required. Typical suppression units include: RS 219-2921 or RS 240-696. Both will suffice.
- Installation must be carried out in accordance with latest codes and regulations by a qualified electrician.
- Ensure power source is disconnected prior to installation or maintenance.
- Environmental conditions during installation should be dry. Moist or wet conditions to be avoided.
- The Beacon is weatherproof to IP65 but only when mounted with the lens uppermost ie. above the black base.
- The Lens is Polycarbonate plastic, so please avoid cleaning with petroleum based cleaners.
- Avoid mounting the beacon where it will be subject to excessive vibration.

LEDD125 & LEDA125 Series

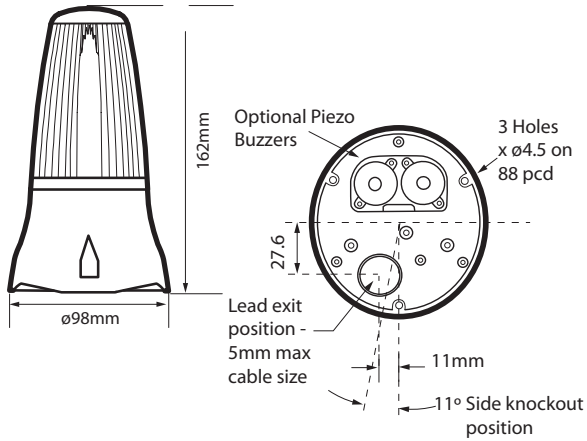

Picture 1

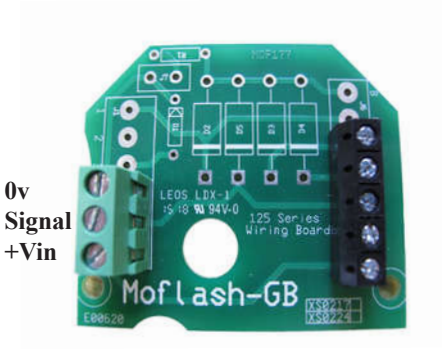

Diagram 1

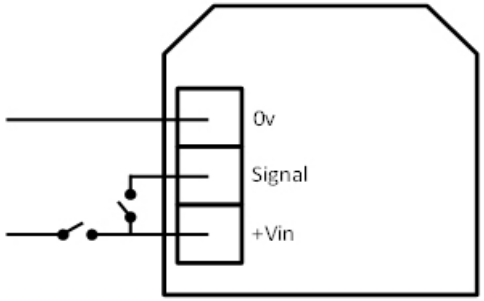

Picture 2

4 Way DIP Switch



Diagram 2

