WORLD'S LEADING MANUFACTURER
OF HAZARDOUS AREA PORTABLE
& TEMPORARY LIGHTING

ATEX Safety Torch with LED

Zones: 0, 1, 2, 20, 21 and 22





Product Overview

The Wolf ATEX Safety Torch with LED is an ATEX and IECEx certified primary cell LED safety torch using the latest technology to give excellent performance, robustness and reliability for safe use in Zones 1 and 2 potentially explosive gas and Zones 21 and 22 dust atmospheres (TR/TS-30+). A Zone 0 and Zone 20 version is available (TR/TS-35+). Group I approval for use in mining applications.

This high strength torch, available with a straight or right angle body, is extremely robust and reliable, with proven shock protection, even at sub zero temperatures, rubber armoured lens ring and end cap, scratch and chemical attack resistance lens - all sealed dust tight and protected from water immersion, with an IP67 enclosure.

The compact, lightweight and ergonomic torch body gives enhanced grip and comfort for the user with easy single-handed switching, even with gloved hands, plus the replaceable high strength clip (on the right angle model only) allows for hands free use. Supplied as standard with wrist strap and clip ring.

Its unique optics deliver a piercing white spot beam combined with a wide-angle flood of fringe light from a high power 'fitted for life' LED giving a peak of up to 130 lumens light output. Two D/LR20 primary alkaline cells provide a light duration of up to 17 hours. With a low battery power indicator allows a user to monitor the state of battery charge, a red flashing light is emitted through the side of the torch body while battery power and light output is high, but switching to continuous red when battery and light output is low, warning battery replacement is required.

NSN Codes

6230-99-2262040 - TR-35+MOD

Features & Benefits

- ATEX and IECEx certified for Zones 1 and 21, Zones 0 and 20 version available, explosive gas and dust atmospheres
- High power 'fitted for life' LED for outstanding light output, no bulb replacement required
- Medium spot beam with wide-angle flood of fringe light
- Compact and lightweight ergonomic torch design, straight and right-angle versions
- Up to 130 lumens light output with up to 17 hours duration
- 2 x 1.5V D/LR20 primary cells with low power indicator
- Supplied with wrist strap and clip ring
- Very low maintenance, quick and easy parts replacement
- Group I Mining Approval

Certifications

0598

Technical Specification

Product Reference		TR-30+	TS-30+	TR-35+	TS-35+
Product Description		Primary Cell LED Right Angle or Straight Safety Torch			
		Right Angle Zone 1 & 21	Straight Zone 1 & 21	Right Angle Zone 0 & 20	Straight Zone 0 & 20
Code (ATEX & IECEx)		I M2/II 2GD Ex ib op is I Mb/IIC T4 Gb (–30°C ≤ Ta ≤ 40/55°C) Ex ib op is IIIB T130°C Db	I M2/II 2GD Ex ib op is I Mb/IIC T4 Gb (-20°C ≤ Ta ≤ 40/55°C) Ex ib op is IIIB T130°C Db	I M1/II 1GD Ex ia op is I Ma/IIC T4 Ga (-30°C ≤ Ta ≤ 40/55°C) Ex ia op is IIIB T130°C Da	I M1/II 1GD Ex ia I Ma/IIC T4 Ga (-20°C ≤ Ta ≤ 40/55°C) Ex ia IIIB T130°C Da
Type of Protection		'ib' intrinsic safety		'ia' intrinsic safety	
Area of Classification (Gas)		Zones 1 & 2 Gas Groups IIA, IIB IIC		Zones 0, 1 & 2 Gas Groups IIA, IIB IIC	
Temperature Classification (Gas)		T4			
Area of Classification (Dust)		Zones 21 and 22 Dust Groups IIIA and IIIB		Zones 20, 21 & 22 Dust Groups IIIA and IIIB	
Max Surface Temp. (Dust)		T130°C			
Ambient Temperature		-30° to +40 / 55°C	-20°C to +40 / 55°C	-30° to +40 / 55°C	-20° to +40 / 55°C
		Maximum ambient temperature is for use only with certain specified cells, as per product instructions.			
Certificate		ATEX Baseefa 07ATEX0091X / IECEx BAS 06.0089X			
Enclosure		Impact Resistant Thermoplastic, Chemical Resistant, Static Dissipative			
Lens		Toughened Glass 4mm			
Beam Type		Medium Spot with Wide-Angle Flood of Fringe Light			
Light Source:	Part No.	**TP-300**			
	Power	Torch LED Module			
	Output	Up to 130 lm			
	Life	25,000hrs+ (Fitted for Life)			

Power Source:	**Part No.**	2 x H-20 (2 x LR-20 Cell suitable for 55° Maximum Ambient Temperature) (Batteries not supplied with torch)			
	Type	LR20 Primary Cells to IEC60086			
	Power	2 x 1.5v			
Low Battery Indicator		Yes			
Light Duration		Up to 14 hours to low power indicator Up to 17 hours total			
Ingress Protection		IP67			
Weight (inc. cells)		0.500kg	0.475kg	0.500kg	0.475kg

- The maximum ambient temperature is for use only with certain specified cells, as per product instructions.
- All information has been gathered under laboratory conditions, the user must regard the values given as approximate.
- Changes may be made to the above specification without notification, details are available on request.

Product Dimensions

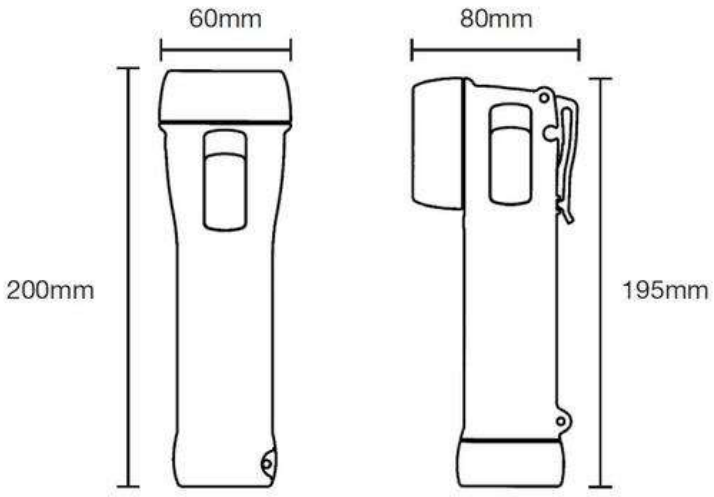

Light Output

130 lumens Medium Spot Beam (approx 5°) with Wide- Angle Flood of Fringe Light (approx. 100°)
Peak luminous intensity at 1m **11,300lux**, 5m, **405lux**

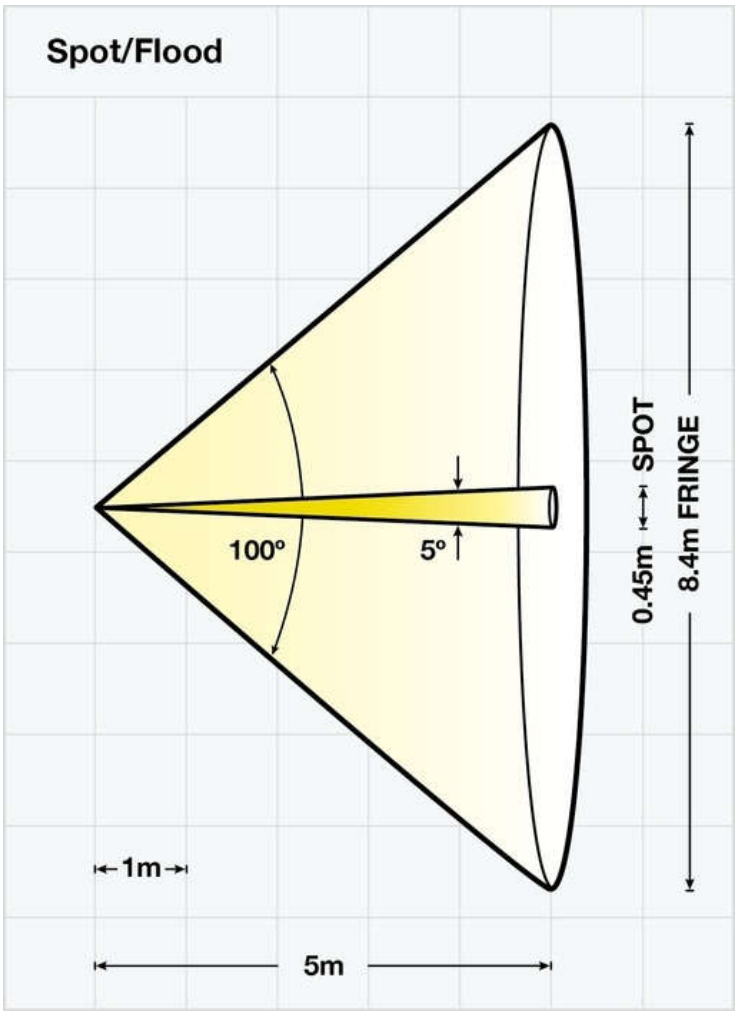

Wolf Safety Lamp Company, Saxon Road Works, Sheffield, S8 0YA, UK
• **T:** +44 (0) 114 255 1051 • **F:** +44 (0) 114 255 7988
• **E:** info@wolfsafety.com • **www.wolfsafety.com**