Angular contact ball bearings

3206-BD-XL-2HRS-TVH (Series 32..-BD-2HRS)

main dimensions to DIN 628-3, double row, lip seals on both sides, contact angle α = 30°

The datasheet is only an overview of dimensions and basic load ratings of the selected product. Please always observe all the guidelines in these overview pages. Further information is given on many products under the menu item "Description". You can also order comprehensive information via the Catalogue selection system (http://www.fag.de/content.fag.de/en/mediathek/library/library.jsp) or by telephone on +49 (91 32) 82 - 28 97.

d	30	mm	
D	62	mm	
B	23,8	mm	
a	36,4	mm	
D_2	55,8	mm	
d_2	40,3	mm	
$D_{a\ max}$	56,4	mm	
$d_{a\ min}$	35,6	mm	
$r_{a\ max}$	1	mm	
r_{min}	1	mm	
α	30	°	Contact angle
m	0,29	kg	Mass
C_r	31000	N	Basic dynamic load rating, radial
C_{0r}	22200	N	Basic static load rating, radial
C_{ur}	1490	N	Fatigue limit load, radial
n_G	9000	1/min	Limiting speed

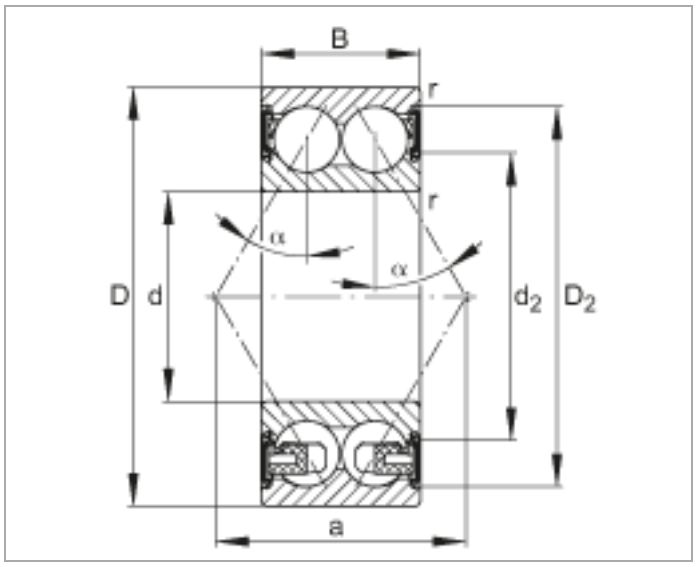
B
r
r
α
α
D
d
d2
D2
a

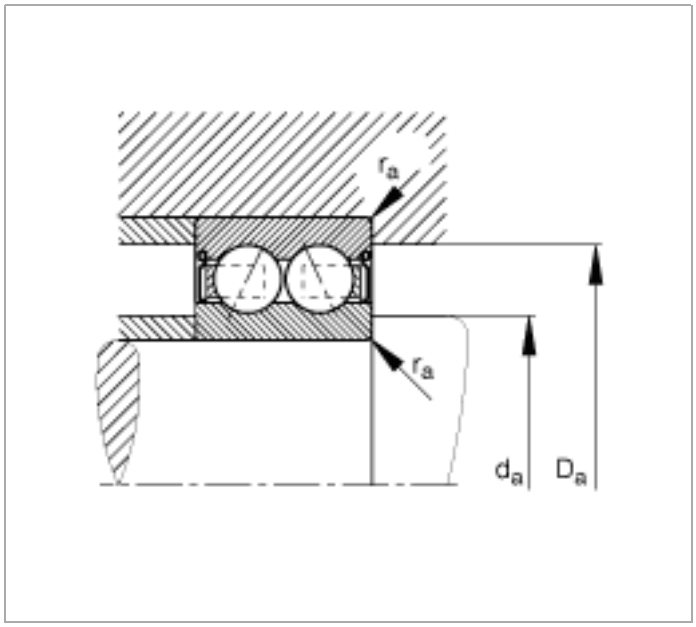
ra
ra
da
Da