E20730

Mounting set for position sensors

MOUNTING SET 3 FREESTANDING

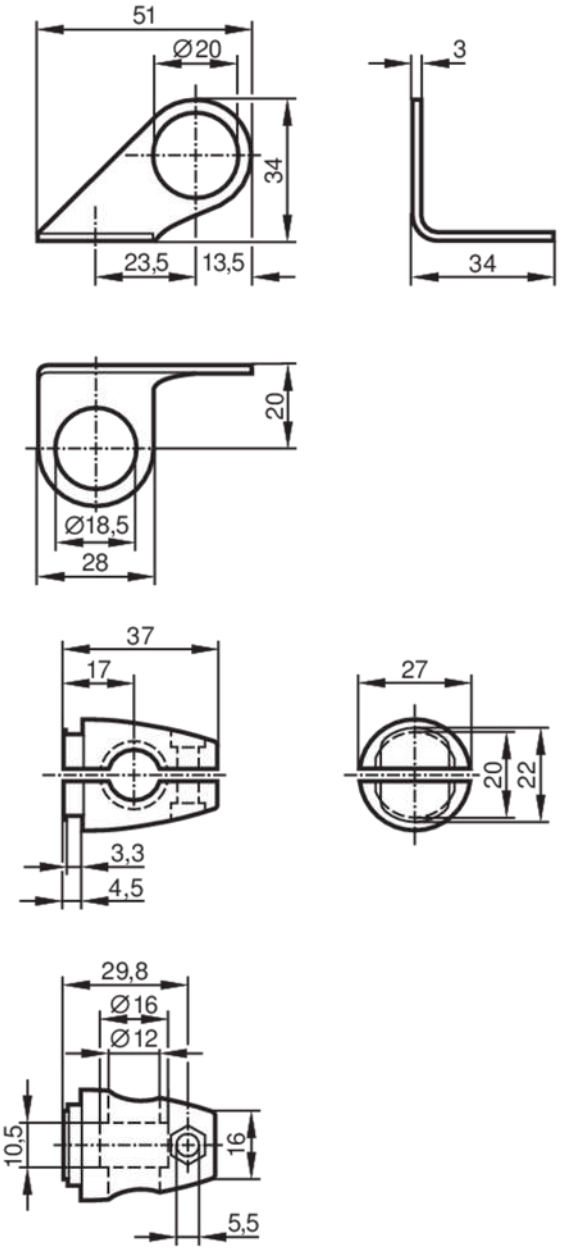

Mechanical data		
Weight	[g]	159.5
Type of mounting		free-standing; (3/8")
Dimensions	[mm]	Ø 18.5
Materials		Clamp: diecast zinc; fixture: steel
Accessories		
Items supplied		head cap screw: 1 x 3/8" x 2"
Remarks		
Pack quantity		1 pcs.