PT(C)L, PT(C)F SERIES

3.5x4.7
Side Push & Vertical Push

TACT SWITCH

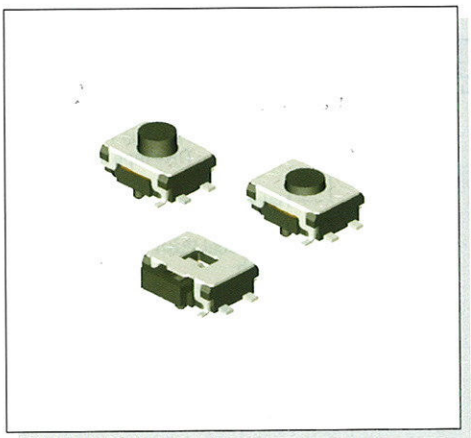

HOW TO ORDER

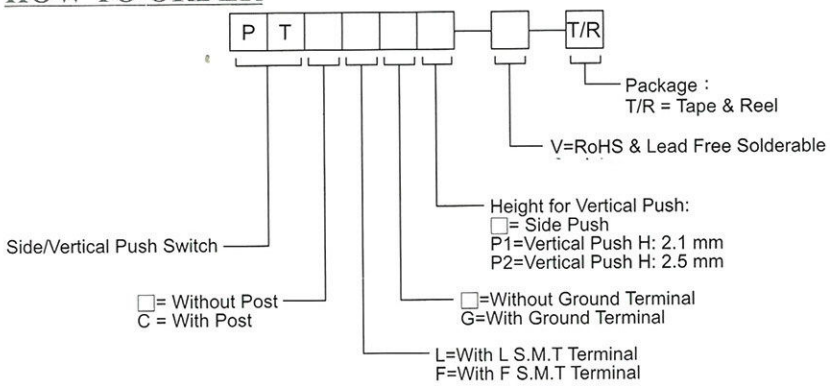

SPECIFICATION

MECHANICAL

Operation Force: 220+80/ - 70gf Side push
160±50gf Vertical push
Stroke: 0.30+ 0.1mm/ - 0.15mm Side push
0.20±0.1mm Vertical push

ENVIRONMENTAL

Operation Temperature Range : -25°C to +70°C
Storage Temperature Range : -30°C to +80°C

ELECTRICAL

Electrical Life:100,000 cycles min.
Rating : 50mA, 12VDC

PACKAGE

Side push type: 3000 pcs/reel
Vertical push type: 2400 pcs/reel

CIRCUIT

PT(L)(F)

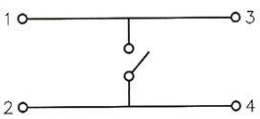

PT(L)(F)G,PTC(L)(F)GP

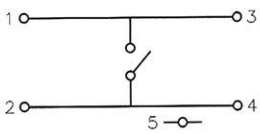

PTCL

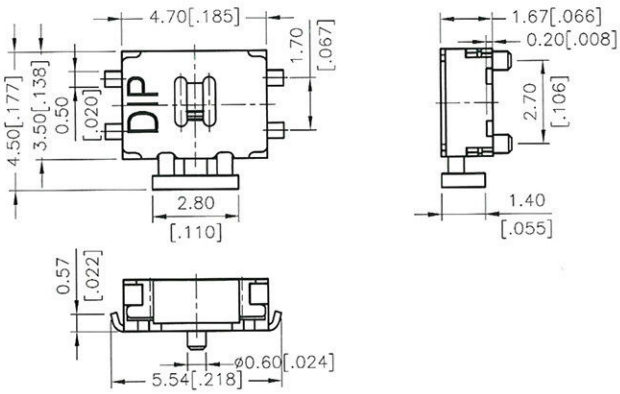

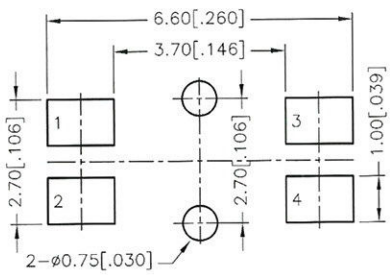

P.C.B LAYOUT

PTCFG

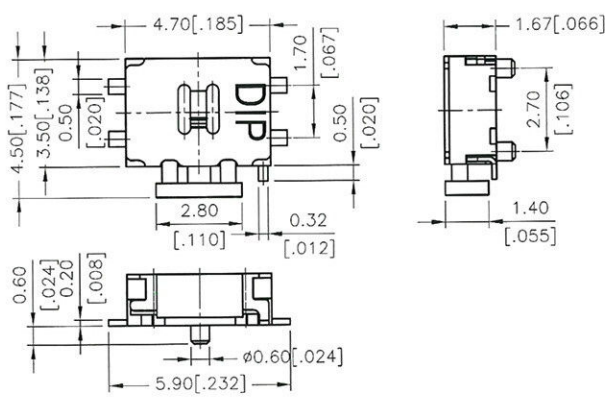

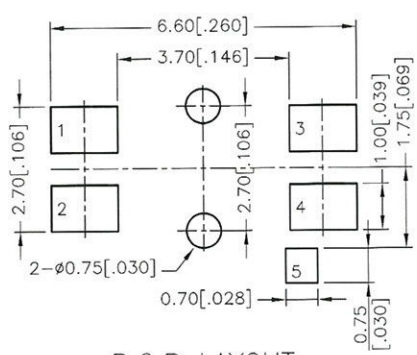

P.C.B LAYOUT

General Tolerance: ±0.2mm(±0.008")