Product data sheet
Characteristics

XC2JC10111
limit switch XC2-J - roller lever - 1 C/O



Main

Range of product	OsiSense XC
Series name	Special format
Product or component type	Limit switch
Product specific application	For severe applications
Device short name	XC2J
Body type	Fixed
Head type	Rotary head
Material	Metal
Movement of operating head	Rotary
Type of operator	Thermoplastic roller lever
Switch actuation	By 30° cam
Type of approach	Lateral approach, 2 directions
Number of poles	1
Contact operation	Snap action
Minimum torque for tripping	0.3 N.m
Maximum actuation speed	1.5 m/s

Complementary

Fixing mode	By the body
Electrical connection	Screw-clamp terminals, 1 x 0.5...2 x 2.5 mm²
Cable entry	1 entry incorporating cable gland, cable outer diameter: 6...13.5 mm
Contacts insulation form	Za
Contacts material	Silver plated contacts
Positive opening	Without
Minimum actuation speed	0.001 m/min
Contact code designation	DC-13 Q300(Ue = 250 V, Ie = 0.27 A) EN/IEC 60947-5-1 AC-15 A300(Ue = 240 V, Ie = 3 A) Ithe = 10 A EN/IEC 60947-5-1
[Ui] rated insulation voltage	300 V conforming to CSA C22.2 No 14 500 V conforming to IEC 60947-5-1

Disclaimer: This documentation is not intended as a substitute for and is not to be used for determining suitability or reliability of these products for specific user applications

	500 V conforming to NF C 20-040 group C
Resistance across terminals	<= 25 MOhm conforming to IEC 60255-7 category 3 <= 25 MOhm conforming to NF C 93-050 method A
Short-circuit protection	10 A by cartridge fuse, type gG
Electrical durability	5000000 cycles DC-13, 120 V 4 W, <= 3600 cyc/h, load factor: 0.5 conforming to IEC 60947-5-1 appendix C 5000000 cycles DC-13, 24 V 10 W, <= 3600 cyc/h, load factor: 0.5 conforming to IEC 60947-5-1 appendix C 5000000 cycles DC-13, 48 V 7 W, <= 3600 cyc/h, load factor: 0.5 conforming to IEC 60947-5-1 appendix C
Mechanical durability	30000000 cycles
Width	40 mm
Height	143...183 mm
Depth	65 mm
Product weight	0.62 kg
Terminals description ISO n°1	(13-14-11-12)OF

Environment

Shock resistance	25 gn for 18 ms conforming to IEC 60068-2-27
Vibration resistance	10 gn (f = 10...500 Hz) conforming to IEC 60068-2-6
IP degree of protection	IP65 conforming to IEC 60529 IP657 conforming to NF C 20-010
IK degree of protection	IK08
Electrical shock protection class	Class I conforming to IEC 60536 Class I conforming to NF C 20-030
Ambient air temperature for operation	-25...70 °C
Ambient air temperature for storage	-40...70 °C
Protective treatment	TC
Product certifications	CSA DEMKO NEMKO
Standards	EN/IEC 60947-5-1 IEC 60337-1 UL 508 VDE 0660-200 CSA C22.2 No 14

Offer Sustainability

Sustainable offer status	Green Premium product
RoHS (date code: YYWW)	Compliant - since 1014 - Schneider Electric declaration of conformity Schneider Electric declaration of conformity
REACh	Reference not containing SVHC above the threshold Reference not containing SVHC above the threshold
Product end of life instructions	Need no specific recycling operations

Contractual warranty

Warranty period	18 months

Dimensions

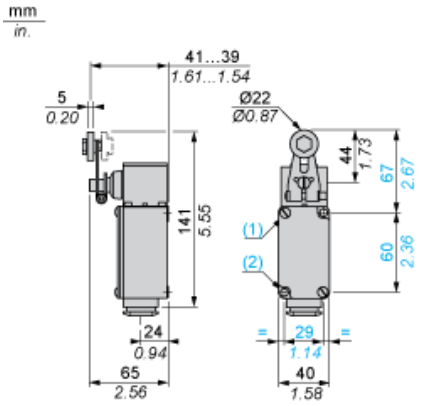

(1) Fixing from the rear: by 2 M5 screws. Depth of thread on switch: 10 mm.
(2) Fixing from the front via 2 holes Ø 5.5.

Wiring Diagram

Single-pole CO Snap Action

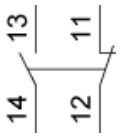

Characteristics of Actuation

Switch Actuation by 30° Cam

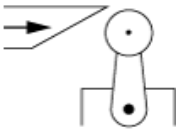

Functionnal Diagram

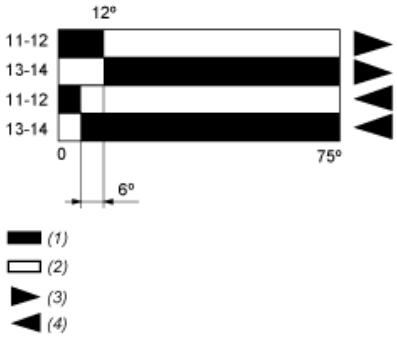

(1) Closed
(2) Open
(3) Tripping
(4) Resetting