Datasheet

Pneumatic Elbow Threaded to the Tube Adapter, G ¼ Male, Push in 6mm

RS Stock number [4454596]



Features

- Connection of tubing at a 90° angle to a threaded port
- Solid construction and compact
- External shapes easy to clean
- Components comply with FDA standard, and 1935/2004/EC regulation
- Excellent resistance to corrosion

Specifications

Vacuum Capability	755 mm Hg
Body:	FDA Chemical Nickel Plated Brass
Sub-base:	FDA Chemical Nickel Plated Brass
'O'-rings:	FKM
Collar:	FDA Chemical Nickel Plated Brass
Sealing Washer:	FDA Chemical Nickel Plated Brass
Angle:	90°
Finish:	Nickel Plated
Manufacturer Series:	3699
Material:	Brass
Maximum Operating Pressure:	20 bar
Operating Temperature Range:	-20°C to +120°C
Threaded Connection	G ¼ in Male
Tube Connection	Push In 6 mm

Datasheet

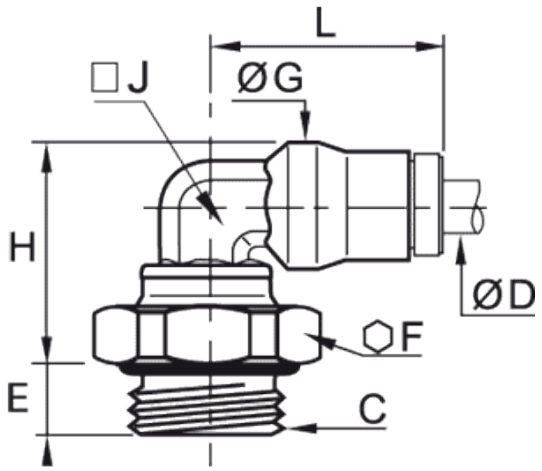

Measurements

- ØD (mm): 6
- C: G1/4
- E (mm): 6.5
- F (mm): 16
- ØG (mm): 12
- H (mm): 19.5
- J (mm): 8
- L (mm): 21.5
- Weight (kg): 0.069