

Switch pos. query, 3 pos., LED-G, front

Part no. **M22-SWD-K22LED-G**

Article no. **115980**

Powering Business Worldwide

Delivery programme

Basic function			Function elements
Function			for combination with RMQ-Titan operating elements M22-...
Fixing			Front fixing
Contacts			2 changeover contact
Contact sequence			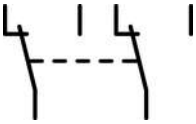
Contact travel diagram stroke in connection with front element			
Configuration			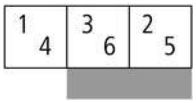
Colour			
			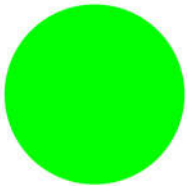
Connection to SmartWire-DT			yes

Approbationen

UL approval	Yes
CSA approval	Yes
UL File No.	E29184
UL CCN	NKCR
CSA File No.	2324643
CSA Class No.	3211-07
NA Certification	UL listed, CSA certified
Specially designed for NA	No

General

Standards			IEC/EN 61131-2 EN 50178
Dimensions (W x H x D)		mm	17 x 42 x 45
Weight		g	14
Mounting position			As required

Ambient conditions, mechanical

Protection type (IEC/EN 60529, EN50178, VBG 4)			IP20
Vibrations (IEC/EN 61131-2:2008)			
Constant amplitude 3,5 mm		Hz	5 - 8.4
Constant acceleration 1 g		Hz	8.4 - 150
Mechanical shock resistance (IEC/EN 60068-2-27) semi-sinusoidal 15 g/11 ms		Impacts	9
Drop to IEC/EN 60068-2-31	Drop height	mm	50
Free fall, packaged (IEC/EN 60068-2-32)		m	0.3

Electromagnetic compatibility (EMC)

Overvoltage category			Not applicable
Pollution degree			2

Electrostatic discharge (IEC/EN 61131-2:2008)		
Air discharge (Level 3)	kV	8
Contact discharge (Level 2)	kV	4
Electromagnetic fields (IEC/EN 61131-2:2008)		
80 - 1000 MHz	V/m	10
1.4 - 2 GHz	V/m	3
2 - 2.7 GHz	V/m	1
Radio interference suppression (SmartWire-DT)		EN 55011 Class A
Burst (IEC/EN 61131-2:2008, Level 3)		
Supply cables	kV	2
SmartWire-DT cables	kV	1
Radiated RFI (IEC/EN 61131-2:2008, Level 3)	V	10

Climatic environmental conditions

Operating ambient temperature (IEC 60068-2)	°C	- 30 - + 55
Condensation		Take appropriate measures to prevent condensation
Storage	°C	- 40 - 80
relative humidity, non-condensing (IEC/EN 60068-2-30)	%	5 - 95

SmartWire-DT network

Station type		SmartWire-DT slave
Address allocation		automatic
Status indication	LED	Green
Connections		Plug, 8-pole
Plug connectors		**SWD4-8SF2-5**

Fieldbus interface

Baud rate setting		automatic

Technische Daten nach ETIM 4.0

Suitable for earth leakage circuit breaker		No
Type of electric connection		Blade terminal
Rated operation current Ie at AC-15, 230 V	A	0
Mounting type		Front mount
Suitable for pendant switch		No
Suitable for front element		YES
Suitable for circuit-breakers		No
Suitable for safety position switches		No
Suitable for step switches		No
Suitable for pressure switch/selector switch actuator		YES
Suitable for cam switches		No
Suitable for motor protective circuit breakers		No
Suitable for series-mounting relays		No
Suitable for solenoid		No
Suitable for compact switch-disconnector		No
Suitable for miniature circuit-breakers		No
Suitable for pulse relay		No
Suitable for contactor relay relay		No
Suitable for pendant pushbutton		No
Suitable for residual current device		No
Number of contacts as change-over contact		0
Number of contacts as N/O		2
Number of contacts as NC		2
Suitable for impulse relays		No
Suitable for position switches		No
Suitable for switch-disconnector/residual current device		No
Suitable for contactors		No
Suitable for installation contactor / installation relay		No

Dimensions

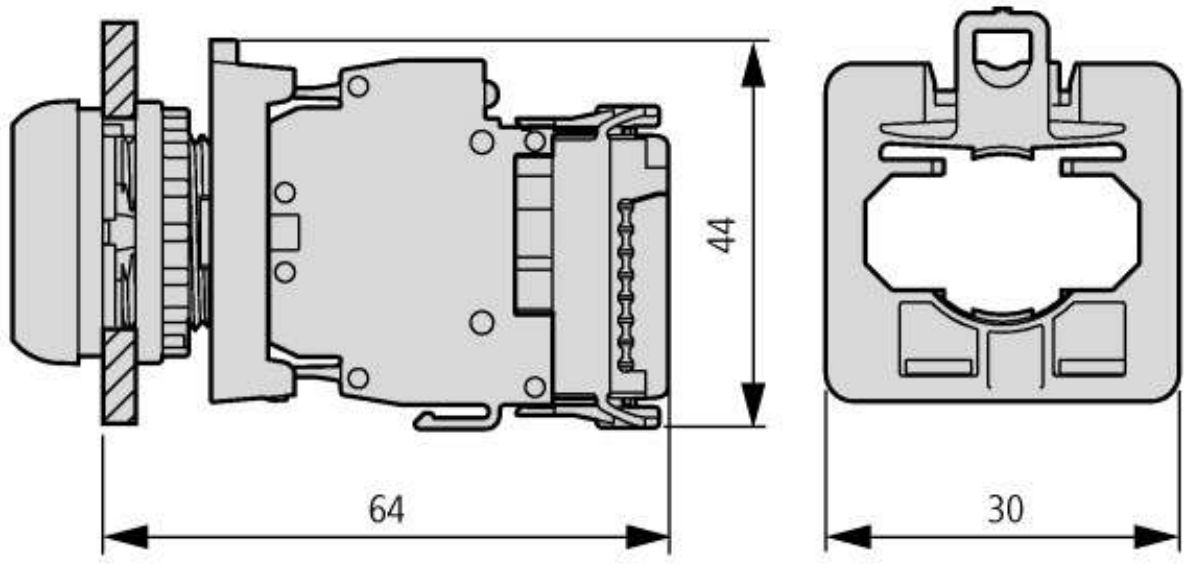

Pushbutton with function element

Additional product information (links)

IL04716004Z (AWA1160-2511) SmartWire-DT: RMQ-Titan	
IL04716004Z (AWA1160-2511) SmartWire-DT: RMQ-Titan	ftp://ftp.moeller.net/DOCUMENTATION/AWA_INSTRUCTIONS/IL04716004Z2010_10.pdf
MN05006001Z-EN(AWB2723-1613) SmartWire-DT, Unit	
MN05006001Z-DE (AWB2723-1613) SWD-Teilnehmer - Deutsch	ftp://ftp.moeller.net/DOCUMENTATION/AWB_MANUALS/MN05006001Z_DE.pdf
MN05006001Z-EN(AWB2723-1613) SmartWire-DT, Unit - English	ftp://ftp.moeller.net/DOCUMENTATION/AWB_MANUALS/MN05006001Z_EN.pdf
MN05006001Z-IT (AWB2723-1613) SmartWire-Darwin utenti - italiano	ftp://ftp.moeller.net/DOCUMENTATION/AWB_MANUALS/MN05006001Z_IT.pdf

© 11/2009 by Eaton Industries GmbH