Part No. PCMC6

Issue	B	Date	27/01/2001
Drawn		Date	27/01/2001
Approved	P.J.H	Date	27/01/2001

Unless otherwise stated All Dimensions are in mm

General tolerance +/- 0.25mm

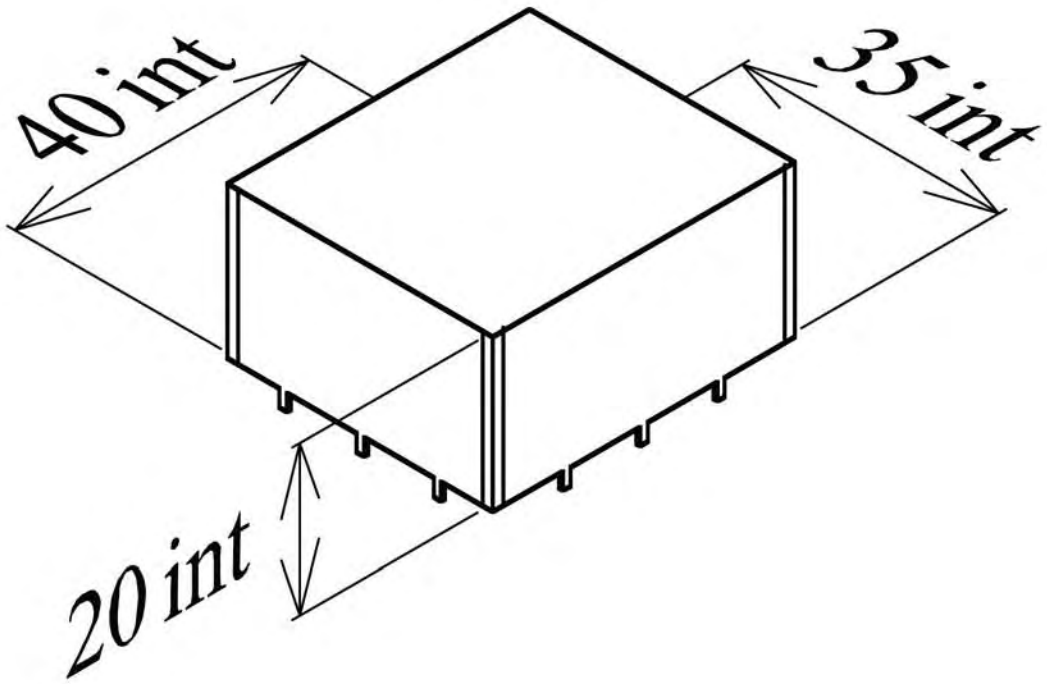

PCB Pin Size & Pitch

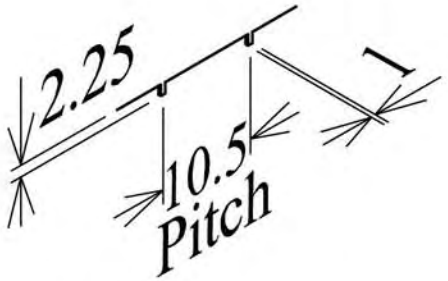

PCB Pin pitch tolerance +/- 0.10mm

Specification

Material:	Tinplate to BS EN 1202
Construction:	Close Butt Jointed Corners
Thickness:	0.54mm
Surface resistivity:	20 x $10^{-6}\Omega$ per square
Conductivity:	5 x 10^{4} mho

THIS DRAWING IS THE PROPERTY OF PERANCEA LTD AND MAY NOT BE COPIED OR REPRODUCED WITHOUT OUR WRITTEN CONSENT

PERANCEA LTD
ENCLOSURE AND INSTRUMENT CASE DESIGNERS AND MANUFACTURERS

Unit 36, Silicon Business Centre, Greenford, UB6 7JZ
Telephone: 020 8365 2520 Fax: 020 8566 7217
Email: sales@perancea.com Web: www.perancea.com