E21011

Mounting set for reflectors

MOUNTING SET FOR REFLECTOR ROD

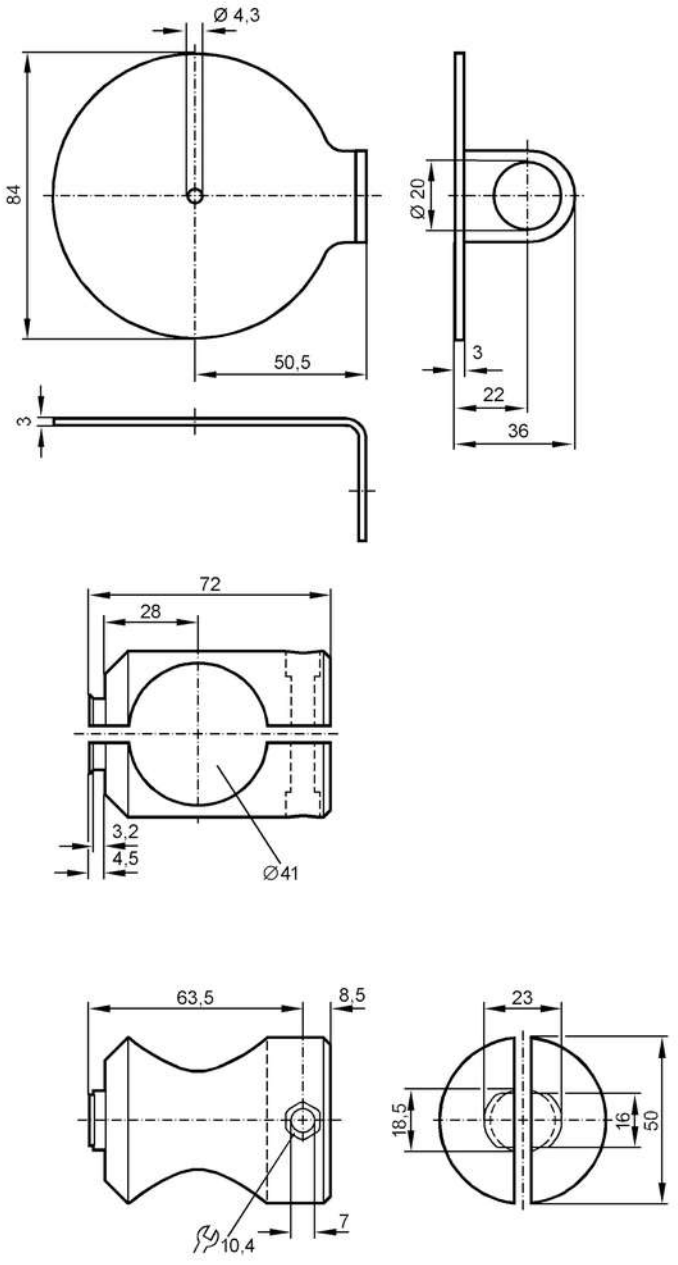

Application		
Design		clamp mounting, for reflector
Mechanical data		
Weight	[g]	363.5
Type of mounting		Mounting rod; (Ø 40 mm)
Materials		fixture: stainless steel (1.4571/316Ti); Clamp: aluminium uncoloured anodised
Remarks		
Pack quantity		1 pcs.