

Image may differ from product. See technical specification for details.

FRB 4/120

Locating (stabilizing) ring

A bearing in the locating position must be secured axially in the housing. If the bearing seat in the housing and the bearing width do not match, locating (stabilizing) rings are required. Typically, two locating rings are required per housing. One ring should be placed on each side of the bearing. If only one locating ring is required, it should be installed on the same side as the lock nut.

Overview

Dimensions

Outside diameter	4.7244 in
Inside diameter	4.3307 in
Width	0.1575 in

Properties

Accessory type	Locating ring

Logistics

Product net weight	0.066 lb
eClass code	23-05-17-90
UNSPSC code	31171519

Technical specification

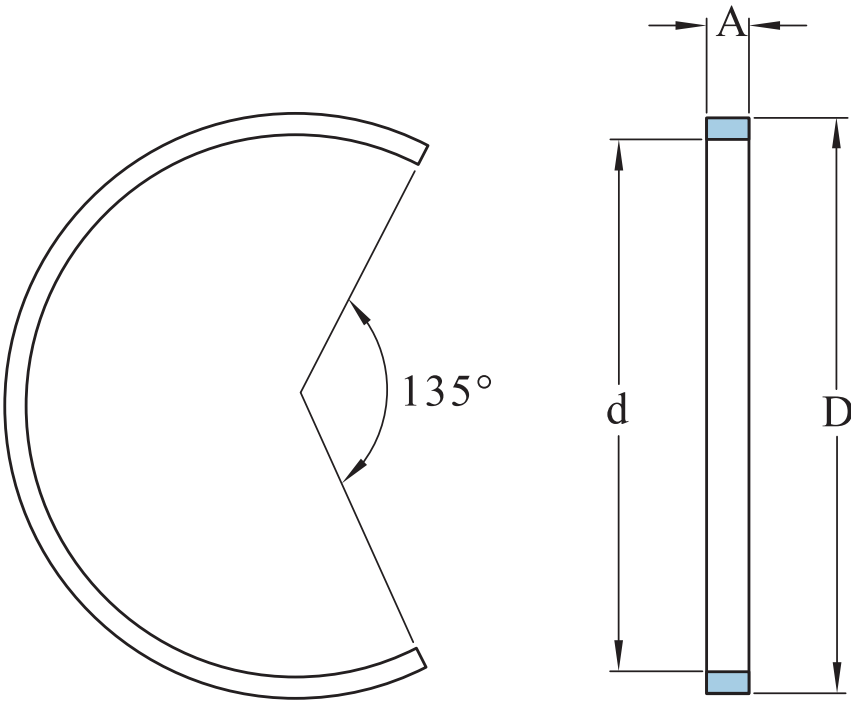

Dimensions

D	4.7244 in	Outside diameter
d	4.3307 in	Inside diameter
A	0.1575 in	Width

Terms of use