MVD, MV, MKV, MKL, 2161C, MXV Series

Float-type air vent valves

Technical Data Sheet



WattsIndustries.com

WATTS®

Description

DUOVENT MVD and MVDR Series, MINIVENT MV and MVR Series, MICROVENT MKV, MKVR, MKL and MKLR Series, FLOATVENT 2161C Series and MAXIVENT MXV Series valves are automatic and/or manual devices for venting air from heating and air conditioning systems.



MVD

DUOVENT (PATENTED)

Automatic and manual air vent valve with unscrewable inspection cover. CW617N brass body and cover. Corrosion-resistant technopolymer float switch. PN 12 bar. Maximum operating pressure: 8 bar. Maximum temperature: 115°C. Automatic discharge capacity at 3 bar: 17.9 NL/min. Manual discharge capacity at 3 bar: 139.5 NL/min. Also suitable for water with additive (glycol up to 30%).

Type	Part No.	DN	Weight (g)
MVD	0250608	1/4”	195
MVD	0250610	3/8”	200
MVD	0250615	1/2”	200



MVDR

DUOVENT

MVD Series air vent valve with **RIA Series** automatic shut-off valve.

Type	Part No.	DN	Weight (g)
MVDR	0250708	1/4”	210
MVDR	0250710	3/8”	220
MVDR	0250715	1/2”	250



MV

MINIVENT

Automatic air vent valve with unscrewable inspection cover. CW617N brass body and cover. Corrosion-resistant polythene float switch. PN: 12 bar. Maximum temperature: 115°C. Also suitable for water with additive (glycol up to 30%).

Type	Part No.	DN	Weight (g)
MV	0250008	1/4”	195
MV	0250010	3/8”	190
MV	0250215	1/2”	200



MVR

MINIVENT

MV Series automatic air vent valve with RIA automatic shut-off valve.

Type	Part No.	DN	Weight (g)
MVR	0250108	1/4”	215
MVR	0250110	3/8”	220
MVR	0250115	1/2”	240



MKV

MICROVENT

Vertical automatic air vent valve. CW617N brass body and cover. Pre-sealed with O-ring. PN 10 bar. Maximum temperature: 110°C. Also suitable for water with additive (glycol up to 30%).

Type	Part No.	DN	Weight (g)
MKV	0251210	3/8”	140



MKVR

MICROVENT

MKV Series vertical automatic air vent valve with **pre-sealed** automatic shut-off valve.

Type	Part No.	DN	Weight (g)
MKVR	0251310	3/8”	165



MKL

MICROVENT

Lateral automatic air vent valve. CW617N brass body and cover. **Pre-sealed** with O-ring. PN 10 bar. Maximum temperature: 110°C.
Also suitable for water with additive (glycol up to 30%).

Type	Part No.	DN	Weight (g)
MKL	0252210	3/8”	140



MKLR

MICROVENT

MKL Series lateral automatic air vent valve with **pre-sealed** automatic shut-off valve.

Type	Part No.	DN	Weight (g)
MKLR	0252310	3/8”	165



2161C

FLOATVENT

Vertical automatic air vent valve. **Pre-sealed with O-ring**. Suitable for installation on the head connections of coplanar manifolds. CW617N brass body. PN 10 bar. Maximum temperature: 110°C.

Type	Part No.	DN	Weight (g)
2161C	2161C38	3/8”	135
2161C	2161C12	1/2”	150
2161C	2161C34	3/4”	160
2161C	2161C1	1”	170



2311C

CHECKVENT

Pre-sealed check valve for vertical automatic air vent valve P/N 2161C38.

Type	Part No.	DN	Weight (g)
2311C	2311C38	3/8”	25



RIA

Automatic shut-off valve for **MVD, MV, MKV and MKL Series** automatic air vent valves. Complete with device for total, rapid drainage of water from the valve.

Type	Part No.	DN	Weight (g)
RIA	0259008	1/4”	25
RIA	0259010	3/8”	25
RIA	0259015	1/2”	45
RIA/PTFE	0259012	3/8”	25



MXV

MAXIVENT

High-flow automatic air vent valve. Equipped with manual vent valve.
Cast iron body and cover with epoxy paint finish. PN 12 bar.
Maximum operating temperature: 115°C. 3/8”F air outlet connection.

Type	Part No.	DN	Weight (g)
MXV	0253020	3/4”	4380
MXV	0253025	1”	4440
MXV	0253032	1.1/4”	4400

DUOVENT

In addition to its automatic air venting feature, the **MVD and MVR Series** DUOVENT valve is equipped with a device for manual air venting. The manual air vent device offers the following advantages:

a) enables the valve to be checked for correct operation;
b) reduces the time taken to discharge air from the system by increasing the discharge flow rate;
c) facilitates cleaning of the orifice by forcing water to flow through it.

Manual venting is actuated by pressing pushbutton (10) down; this can be done by exerting pressure on the surface, for example with a screwdriver. This moves the head (9), which is integral with the O-ring (12), to a position lower than the seat, thus allowing air and/or water to evacuate along the stem (10). When water comes out of both orifice (A) and orifice (B), this indicates that all the air has been expelled from the system.

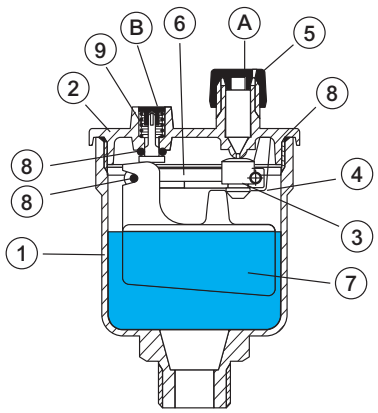

Parts

A) Automatic venting
B) Manual venting
1) Body
2) Cover
3) Disc
4) Spring
5) Cap
6) Lever
7) Float
8) Seals
9) Spring

Technical features	
Nominal pressure	12 bar
Maximum pressure	8 bar
Maximum operating temperature	115°C

Features	
Body	CW617N brass
Cover	CW617N brass
Float	high-density expanded polythene
Disc	polyphenylene oxide
Plug	fibreglass-reinforced polyphenylene oxide
Lever	fibreglass-reinforced polyphenylene oxide
Seals	NBR
Spring	stainless steel
Vacuum breaker	polyacetal
Connections	M 1/4”-3/8”-1/2” DIN-ISO 228/1

MINIVENT

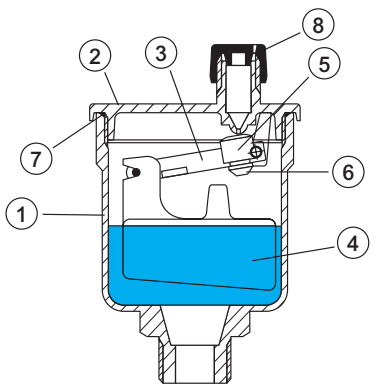

Parts

1) Body
2) Cover
3) Lever
4) Float
5) Disc
6) Spring
7) Seals
8) Cap

Technical features	
Maximum operating pressure	12 bar
Maximum operating temperature	115°C

Features	
Body	CW617N brass
Cover	CW617N brass
Lever	polyacetal
Float	high-density expanded polythene
Disc	EPDM
Spring	stainless steel
Seals	NBR
Cap	polyamide
Connections	M 1/4”-3/8”-1/2” DIN-ISO 228/1

MICROVENT

MICROVENT MKV, MKVR, MKL and MKLR Series valves are equipped with a vacuum breaker, in the vicinity of the threaded connection, designed to improve the air venting characteristics. The vacuum breaker is not fitted if the **MICROVENT** valve is supplied with an **RIA Series** shut-off valve, as the latter is already equipped with a vacuum breaker.

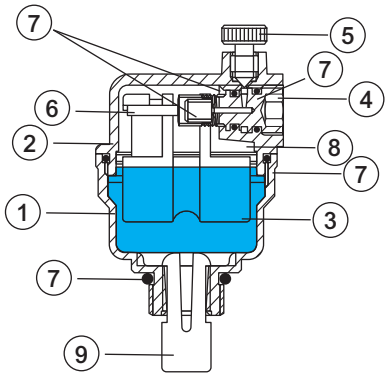

Parts

1) Body
2) Cover
3) Float
4) Disc
5) Plug
6) Lever
7) Seals
8) Spring
9) Vacuum breaker

Technical features	
Maximum operating pressure	10 bar
Maximum operating temperature	110°C

Features	
Body	CW617N brass
Cover	CW617N brass
Float	high-density expanded polythene
Disc	polyphenylene oxide
Plug	fibreglass-reinforced polyphenylene oxide
Lever	fibreglass-reinforced polyphenylene oxide
Seals	NBR
Spring	stainless steel
Vacuum breaker	polyacetal
Connections	M 3/8” DIN-ISO 228/1

2161C

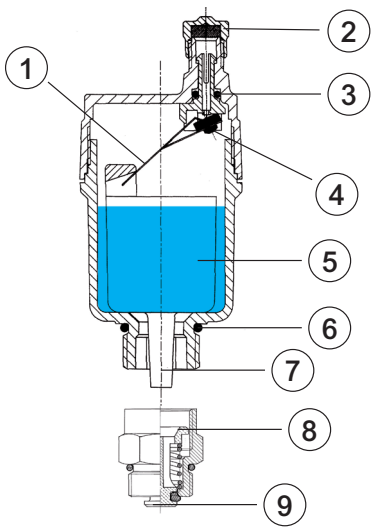

Parts

1) Air venting control mechanism
2) Safety plug
3) Vent O-ring
4) Disc
5) Float
6) O-ring pre-sealing
7) Jet breaker
8) Check valve
9) Check valve disc

Technical features	
Minimum operating pressure	0.1 bar
Maximum operating pressure	10 bar
Maximum operating temperature	115°C
Usable fluids	water, including with glycol ≤ 50%

Features	
Valve body	CW617N
Float	stabilised polypropylene
O-ring seal	EPDM
Disc	silicone rubber
Control mechanism	stainless steel
O-ring pre-sealing	EPDM
Retaining spring	stainless steel
Retaining disc	PA with fibreglass
Vacuum breaker	polyacetal
Connections	M 3/8" DIN-ISO 228/1

MAXIVENT

Due to its considerable size, the **MAXIVENT MXV Series** air vent valve is used for automatically venting air from large water distribution pipes (e.g. distribution manifolds in the central system, on risers) and in all cases where large quantities of air have to be removed from the system. **MAXIVENT** is also equipped with a manual air vent valve.

Technical features	
Maximum discharge pressure	6 bar
Maximum operating pressure	12 bar
Minimum sealing pressure	0.1
Maximum operating temperature	115°C

Features	
Body	GJS-400-15 cast iron entirely coated with epoxy resin
Cover	GJS-400-15 cast iron entirely coated with epoxy resin
Manual vent valve	chrome-plated brass
Lever	stainless steel
Disc	NBR
Float	high-density expanded polythene
Seals	NBR
Cap	brass
Inlet connection	F 3/4" - 1" - 1"1/4 DIN-ISO 228/1
Outlet connection	F 3/8" DIN-ISO 228/1 in brass

Application

These devices are used in all traditional heating systems (independent, central, radiant panel, etc.) to vent air during the filling phase and the air released into the water during the heating phase, which obstructs the normal circulation of the heat carrier fluid, particularly at the points where it circulates at low speed (heat emitters), thus reducing their thermal efficiency. Air vent valves allow the air to be discharged at the points of the system where it accumulates (distribution manifolds, tops of risers or directly in the boiler).

Operation

Automatic operation of air vent valves is based on a float system ensuring a tight seal: valve opening and closing is determined by the movement (up-down) of the float. When there is air in the valve, the force of the float weight acts on the lever which is integral with the disc, thus causing it to move down. In this situation the seat is free and allows the air to be vented out of the system. As the system fills with water, the air trapped in the water circuit is pushed out through the valves. As soon as all the trapped air is discharged, the water entering the tank pushes the float up. As a result, the lever causes the disc to press against the seat, thus sealing the system and preventing the heat carrier fluid from flowing out. The design of this device enables air to be discharged from the system automatically while it is being emptied. **2311C Series** or **RIA Series** check valves can be used to carry out maintenance work while the system is pressurised. The operation of the check valve is based on a spring-loaded device, which is sensitive to system pressure and ensures pressure-tightness by means of EPDM O-rings when there is no air vent valve.

The reliability of the air vent valves is ensured by a Series of tests carried out on 100% of products to check that the body and its components are watertight.

Charts

DUOVENT

Air discharge rate - Operating pressure

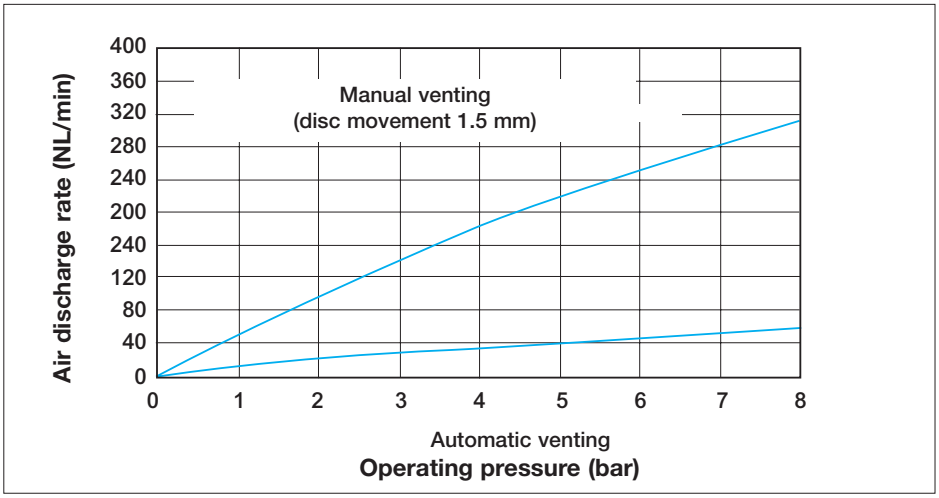

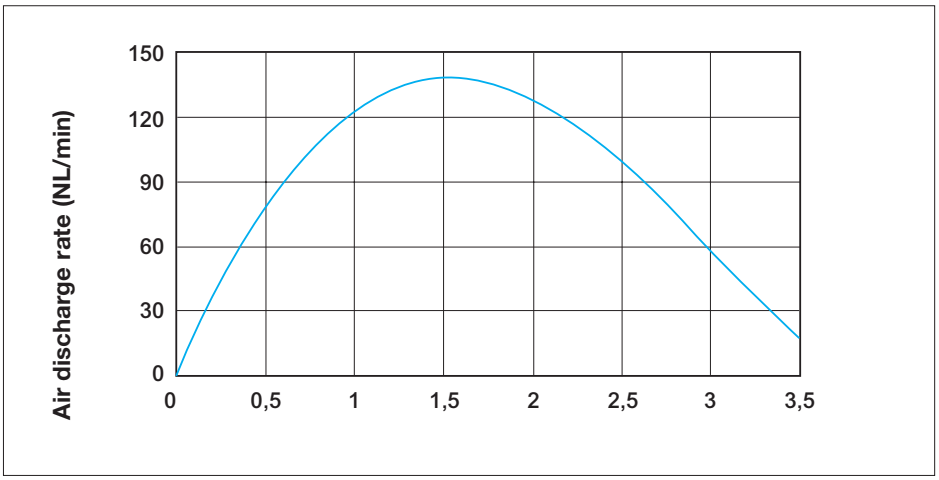

MINIVENT

Air discharge rate - Operating pressure

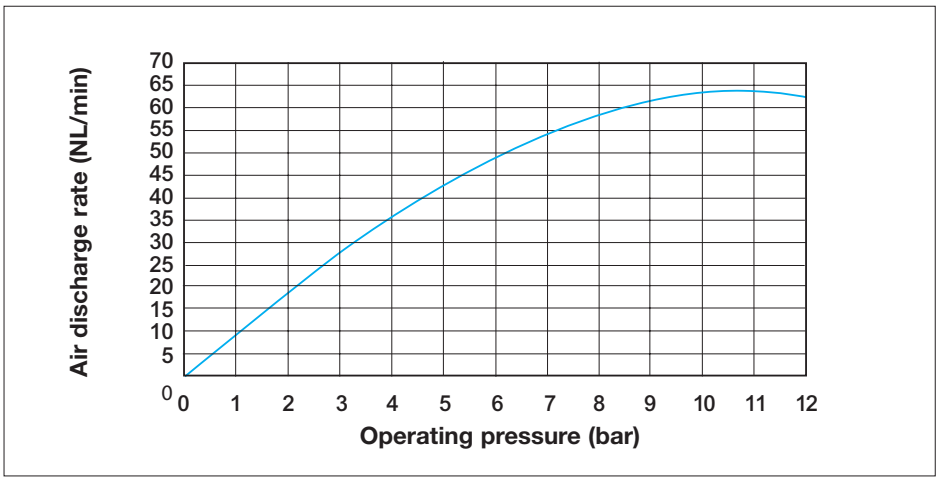

MICROVENT

Air discharge rate - Operating pressure

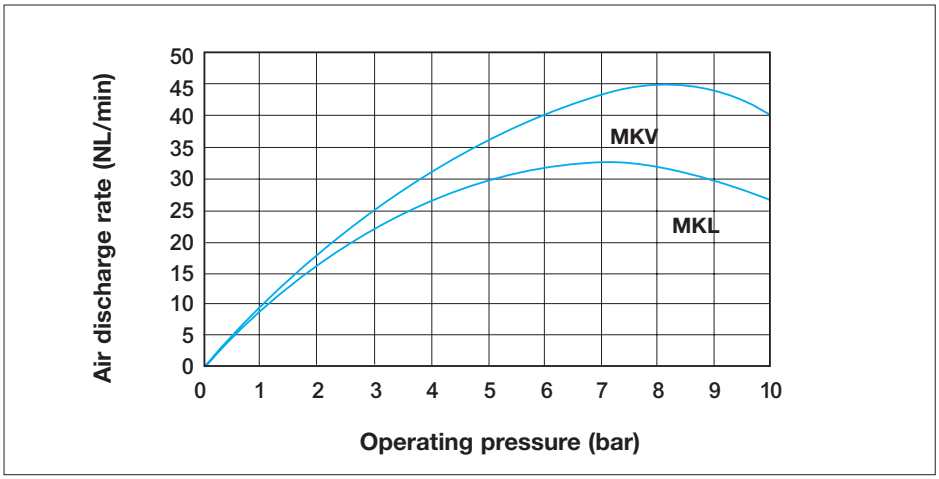

2161C

Discharge capacity

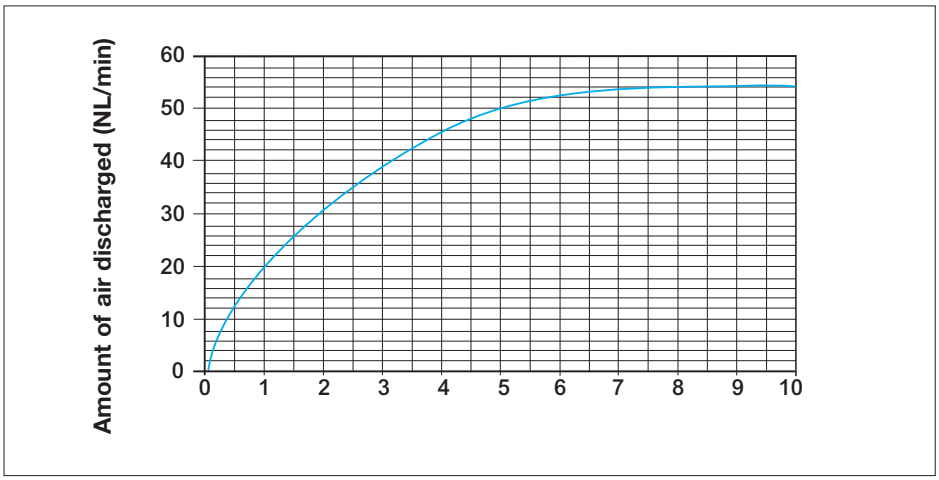

2161C

Suction capacity

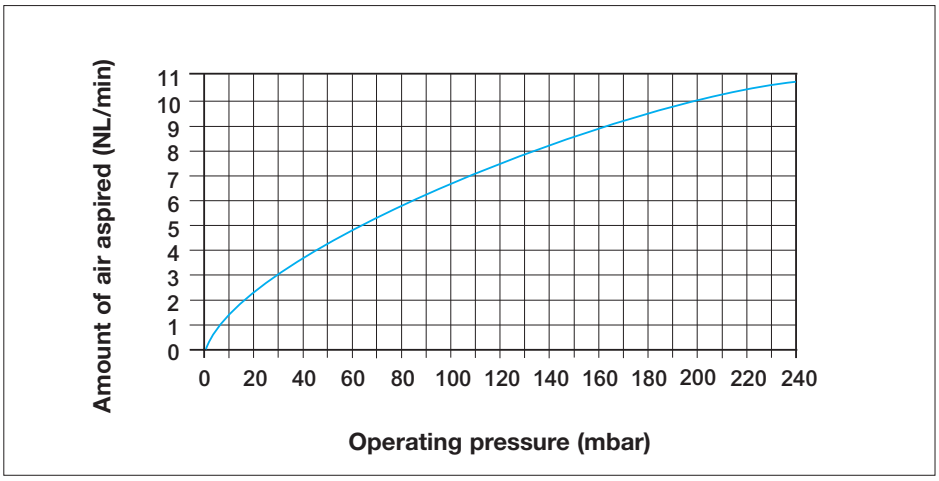

MAXIVENT

Air discharge rate - Operating pressure

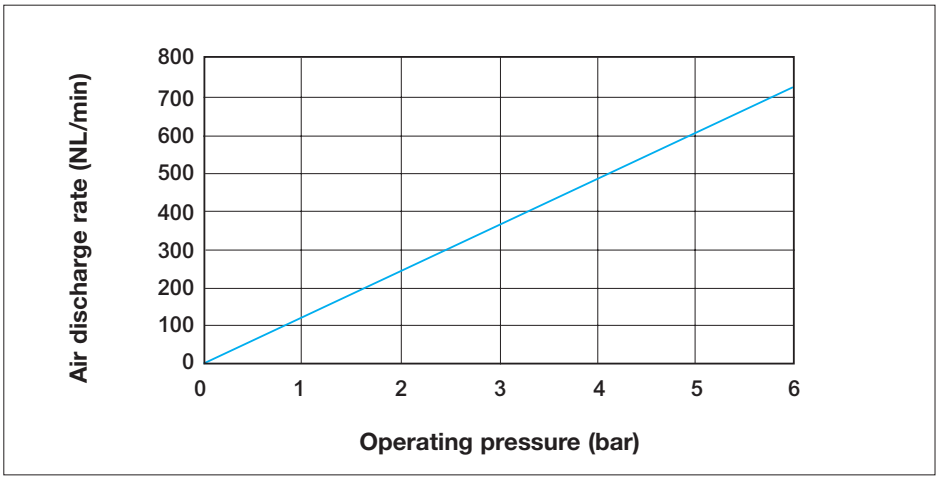

Installation

DUOVENT, MINIVENT, MICROVENT, FLOATVENT and MAXIVENT valves are normally installed:

- at the tops of risers in heating systems with a closed expansion vessel;
- on distribution manifolds;
- directly in the boiler.

For maximum air venting efficiency, install the valves at points where the water speed is relatively low.

After installation, to ensure optimum air venting, unscrew the protection cap by at least two turns (this will provide the venting characteristics shown in the diagrams above).

Should it be necessary to install a MICROVENT valve equipped with vacuum breaker on an **RIA Series** valve, simply remove the vacuum breaker with two fingers.

Maintenance

DUOVENT, MINIVENT, MICROVENT, FLOATVENT and MAXIVENT valves are normally maintenance-free.

The valves can be inspected by unscrewing the cover from the tank or, in the case of **MAXIVENT**, unscrewing the screws with which it is fastened to the body. A seal ensures pressure-tightness between the tank and the cover. The internal components (float and lever) can therefore be cleaned if foreign bodies get into the valve.

The valve's design characteristics ensure the long-term efficiency and smooth running of the venting movement. The sealing system is designed to withstand vibration and is therefore not affected by possible external vibration.

If you need to replace an **MVD, MV, MKV, MKL or 2161C Series valve**, you can do so without draining the system if you use an **RIA o 2311C Series** check valve.

Overall dimensions (mm)

MVD

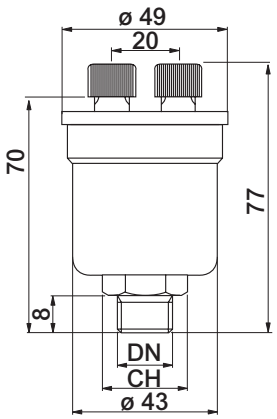

DN	CH
1/4”	19
3/8”	19
1/2”	22

MV

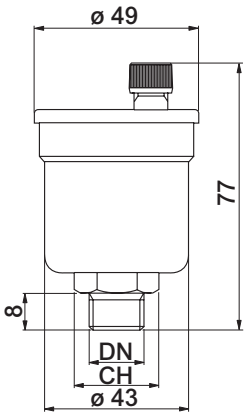

DN	CH
1/4”	19
3/8”	19
1/2”	22

MKL

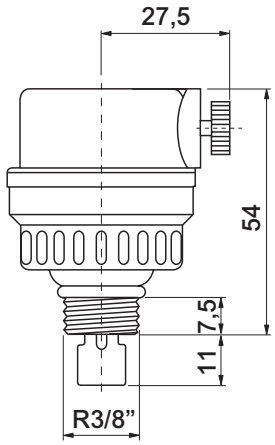

MKV

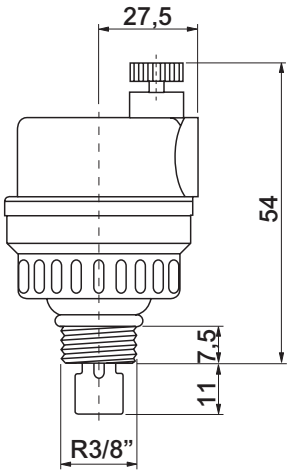

RIA

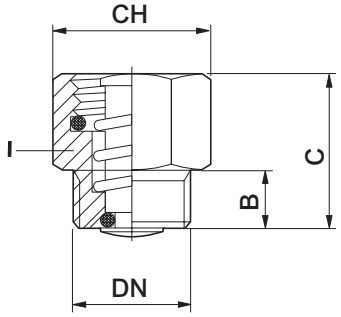

DN	B	C	CH
1/4”	8	11	19
3/8”	8	11	19
1/2”	8	11	24

2161C

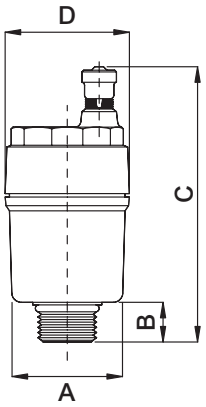

DN	A	B	C	D
3/8”	30	10	77	36
1/2”	30	10	77	36
3/4”	32	12	79	36
1”	37	12	79	36

2311C

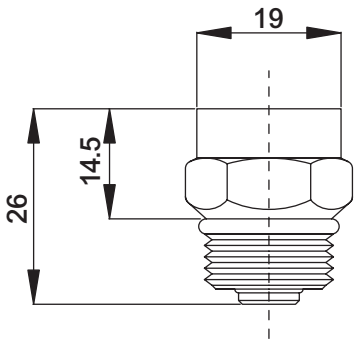

MXV - 3/4” - 1” - 1.1/4”

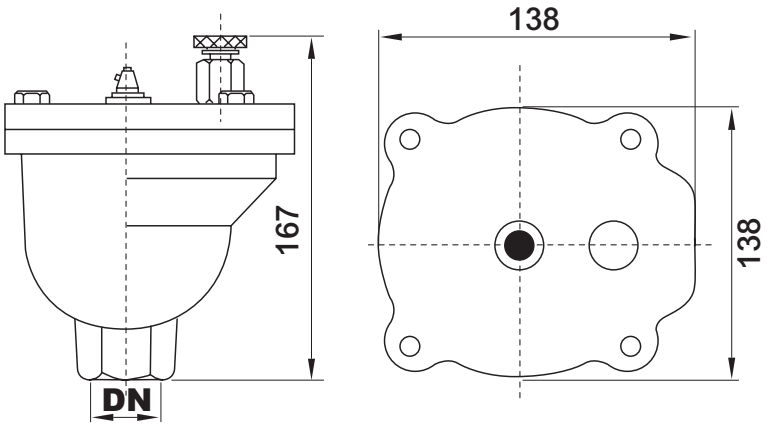

Specification text

MVD Series
Automatic and manual air vent valve DUOVENT **MVD Series** – WATTS brand – with unscrewable inspection cover. CW617N brass body and cover. Corrosion-resistant polythene float switch. PN 12 bar. Max. operating pressure: 8 bar. Max. temperature: 115°C. Automatic discharge capacity at 3 bar: 17.9 NL/min. Manual discharge capacity at 3 bar: 139.5 NL/min. Also suitable for water with additive (glycol up to 30%).

MV Series
Automatic air vent valve MINIVENT **MV Series** – WATTS brand – with unscrewable inspection cover. CW617N brass body and cover. Corrosion-resistant polythene float switch. PN 12 bar. Max. temperature: 115°C. Also suitable for water with additive (glycol up to 30%)

MKV Series
Vertical automatic air vent valve MICROVENT **MKV Series** – WATTS brand. CW617N brass body and cover. Equipped with O-ring. PN 10 bar. Max. temperature: 110°C. Also suitable for water with additive (glycol up to 30%)

MKL Series
Lateral automatic air vent valve MICROVENT **MKL Series** – WATTS brand. CW617N brass body and cover. Equipped with O-ring. PN 10 bar. Max. temperature: 110°C. Also suitable for water with additive (glycol up to 30%)

2161C Series
Vertical automatic air vent valve FLOATVENT **2161C Series** – WATTS brand. CW617N brass body. Equipped with O-ring. Suitable for installation on the head connections of coplanar manifolds. PN 10 bar. Max. temperature: 110°C.

MXV Series
High-flow automatic air vent valve MAXIVENT **MXV Series** – WATTS brand. Equipped with manual vent valve. Cast iron body and cover with epoxy paint finish. PN 12 bar. Max. operating temperature: 115°C. 3/8”F air outlet connection.

The descriptions and photographs contained in this product specification sheet are supplied by way of information only and are not binding.
Watts Industries reserves the right to carry out any technical and design improvements to its products without prior notice. Warranty: All sales and contracts for sale are expressly conditioned on the buyer's assent to Watts terms and conditions found on its website at www.wattsindustries.com. Watts hereby objects to any term, different from or additional to Watts terms, contained in any buyer communication in any form, unless agreed to in a writing signed by an officer of Watts.

Watts Industries Italia S.r.l.
Via Brenno, 21 • 20853 Biassono (MB) • Italy
Tel. +39 039 4986.1 • Fax +39 039 4986.222
infowattsitalia@wattswater.com • www.wattsindustries.com

© 2017 Watts