

Ill.sel.switch act.,3 pos.,red

Part no.	**M22-WRLK3-R**
Article no.	**216845**
Catalog No.	**M22-WRLK3-RQ**

Powering Business Worldwide

Delivery programme

Product range			RMQ-Titan (drilling dimensions 22.5 mm)
Basic function			Illuminated selector switch actuator
Single unit/Complete unit			Single unit
Description			3 positions Stay-put/spring-return function, can be changed with coding parts M22-XC-Y
Function			maintained left: 60° right: 60°
Function			Stay-put
Design			With thumb-grip
Colour			
			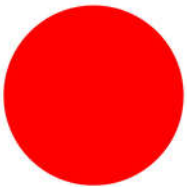
			Red
Protection type			IP66
Front ring			Front ring: titanium
Connection to SmartWire-DT			yes

Approvals

Product Standards	IEC/EN 60947-5; UL 508; CSA-C22.2 No. 14-05; CSA-C22.2 No. 94-91; CE marking
UL File No.	E29184
UL Category Control No.	NKCR
CSA File No.	012528
CSA Class No.	3211-03
North America Certification	UL listed, CSA certified
Degree of Protection	UL/CSA Type 3R, 4X, 12, 13

General

Standards			IEC/EN 60947 VDE 0660
Lifespan, mechanical	Operations	x 10^6	> 0.1
Operating frequency	Operations/h		2000
Operating torque		Nm	0.3
Protection type			IP66
Climatic proofing			Damp heat, constant, to IEC 60068-2-78 Damp heat, cyclic, to IEC 60068-2-30
Ambient temperature		°C	
Open		°C	- 25 - + 70
Mounting position			As required
Mechanical shock resistance		g	30 Shock duration 11 ms Sinusoidal according to IEC 60068-2-27

Technical data ETIM 5.0

Low-voltage industrial components (EG000017) / Front element for selector switch (EC000222)
Electric engineering, automation, process control engineering / Low-voltage switch technology / Command and alarm device / Front element for selector switches (ecl@ss8-27-37-12-13 [AKF031010])

Number of switch positions			3
Type of control element			Toggle

Suitable for illumination			Yes
Colour control element			Black
Colour indicator light cap			Red
Construction type lens			Round
Hole diameter		mm	22.5
Width opening		mm	0
Height meter opening		mm	0
Switching function latching			Yes
Spring-return			No
Degree of protection (IP), front side			IP66
With front ring			Yes
Material front ring			Plastic
Colour front ring			-

Dimensions

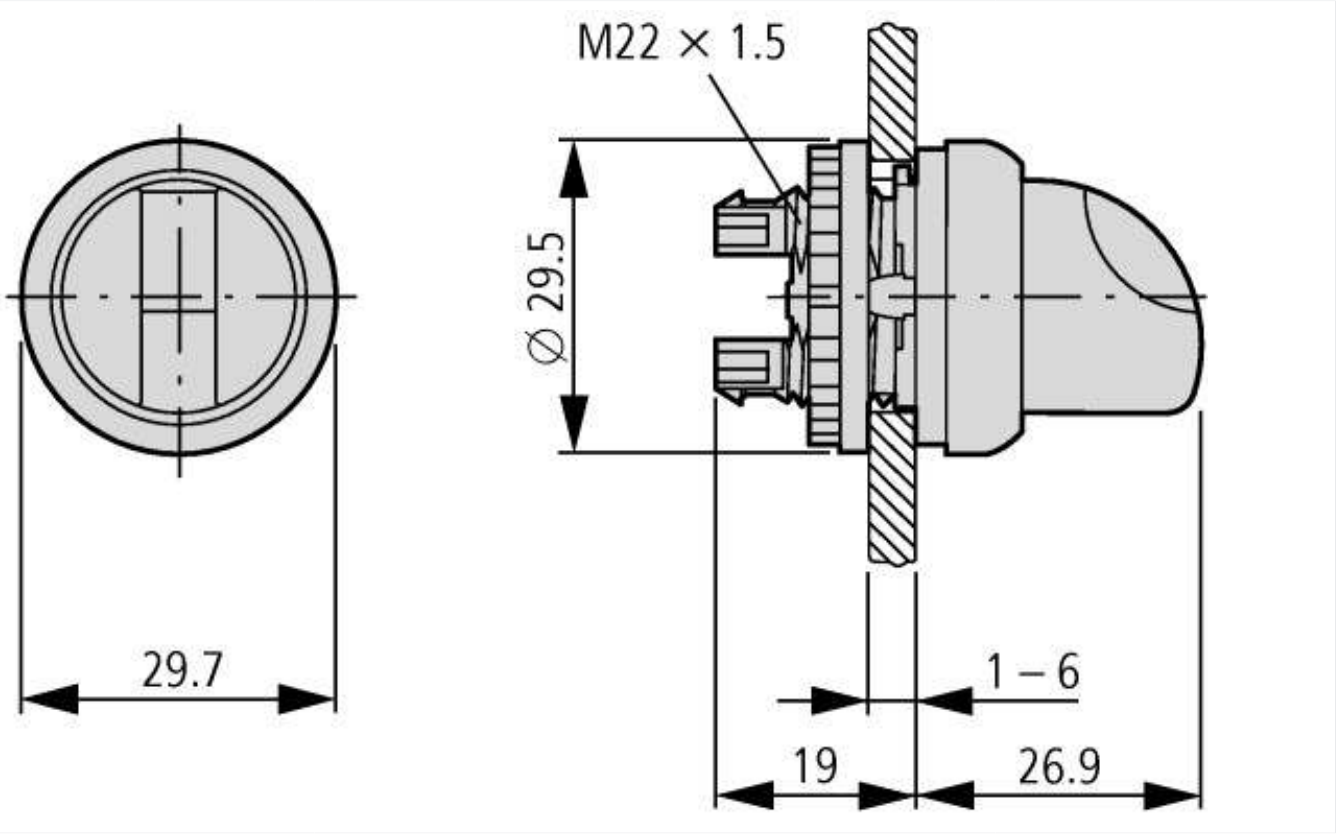

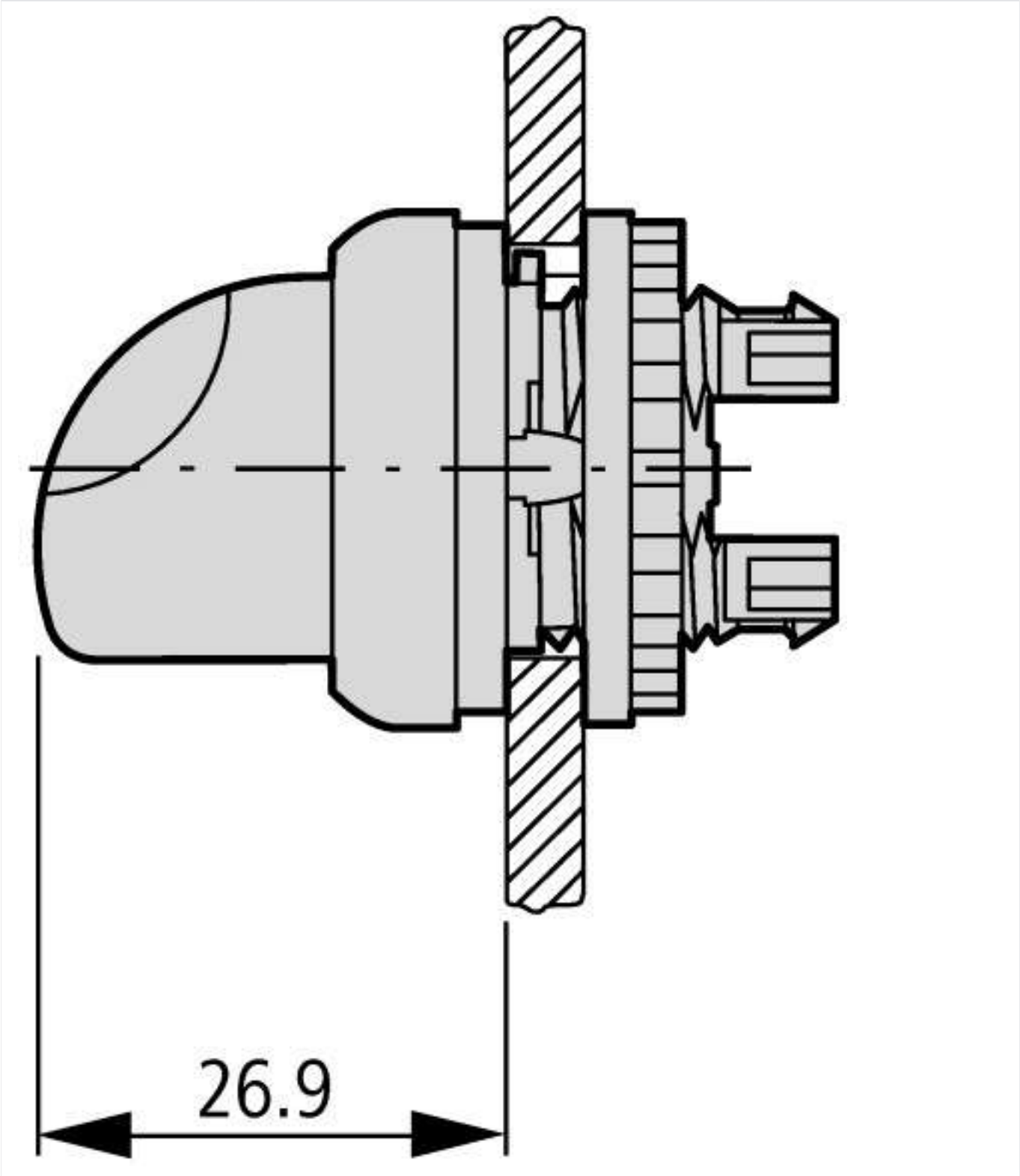

Additional product information (links)

IL04716002Z (AWA1160-1745) RMQ-Titan System	
IL04716002Z (AWA1160-1745) RMQ-Titan System	ftp://ftp.moeller.net/DOCUMENTATION/AWA_INSTRUCTIONS/IL04716002Z2013_08.pdf

© 11/2013 by Eaton Industries GmbH