A2D200-AA02-02

AC axial fan

straight blades (A series)



ebm-papst Mulfingen GmbH & Co. KG
Bachmühle 2 · D-74673 Mulfingen
Phone +49 7938 81-0
Fax +49 7938 81-110
info1@de.ebmpapst.com
www.ebmpapst.com

Limited partnership · Headquarters Mulfingen
Amtsgericht (court of registration) Stuttgart · HRA 590344

General partner Elektrobau Mulfingen GmbH · Headquarters Mulfingen
Amtsgericht (court of registration) Stuttgart · HRB 590142

Nominal data

Type	**A2D200-AA02-02**
Motor	**M2D068-CF**

Phase		3~	3~	3~	3~
Nominal voltage	VAC	230	230	400	400
Wiring		Δ	Δ	Y	Y
Frequency	Hz	50	60	50	60
Method of obtaining data		fa	fa	fa	fa
Valid for approval/standard		CE	CE	CE	CE
Speed (rpm)	min^{-1}	2800	3150	2800	3150
Power consumption	W	53	70	53	70
Current draw	A	0.26	0.24	0.15	0.14
Max. back pressure	Pa	200	300	200	300
Max. back pressure	in. wg	0.8	1.2	0.8	1.2
Min. ambient temperature	°C	-25	-25	-25	-25
Max. ambient temperature	°C	75	75	75	75
Starting current	A	0.81	0.78	0.47	0.45

ml = Max. load · me = Max. efficiency · fa = Free air · cs = Customer specification · ce = Customer equipment
Subject to change

AC axial fan

straight blades (A series)

Technical description

Weight	1.6 kg
Fan size	200 mm
Rotor surface	Painted black
Blade material	Sheet steel, painted black
Number of blades	5
Airflow direction	"A"
Direction of rotation	Clockwise, viewed toward rotor
Degree of protection	IP44; installation- and position-dependent as per EN 60034-5
Insulation class	"B"
Moisture (F) / Environmental (H) protection class	H1
Max. permitted ambient temp. for motor (transport/storage)	+ 80 °C
Min. permitted ambient temp. for motor (transport/storage)	- 40 °C
Installation position	Shaft horizontal or rotor on bottom; rotor on top on request
Condensation drainage holes	On rotor side
Mode	S1
Motor bearing	Ball bearing
Touch current according to IEC 60990 (measuring circuit Fig. 4, TN system)	< 0.75 mA
With cable	Lateral
Protection class	I (with customer connection of protective earth)
Conformity with standards	EN 60335-1; CE
Approval	CCC; EAC

ebm-papst Mulfingen GmbH & Co. KG · Bachmühle 2 · D-74673 Mulfingen · Phone +49 (0) 7938 81-0 · Fax +49 (0) 7938 81-110 · info1@de.ebmpapst.com · www.ebmpapst.com

AC axial fan

straight blades (A series)

Product drawing

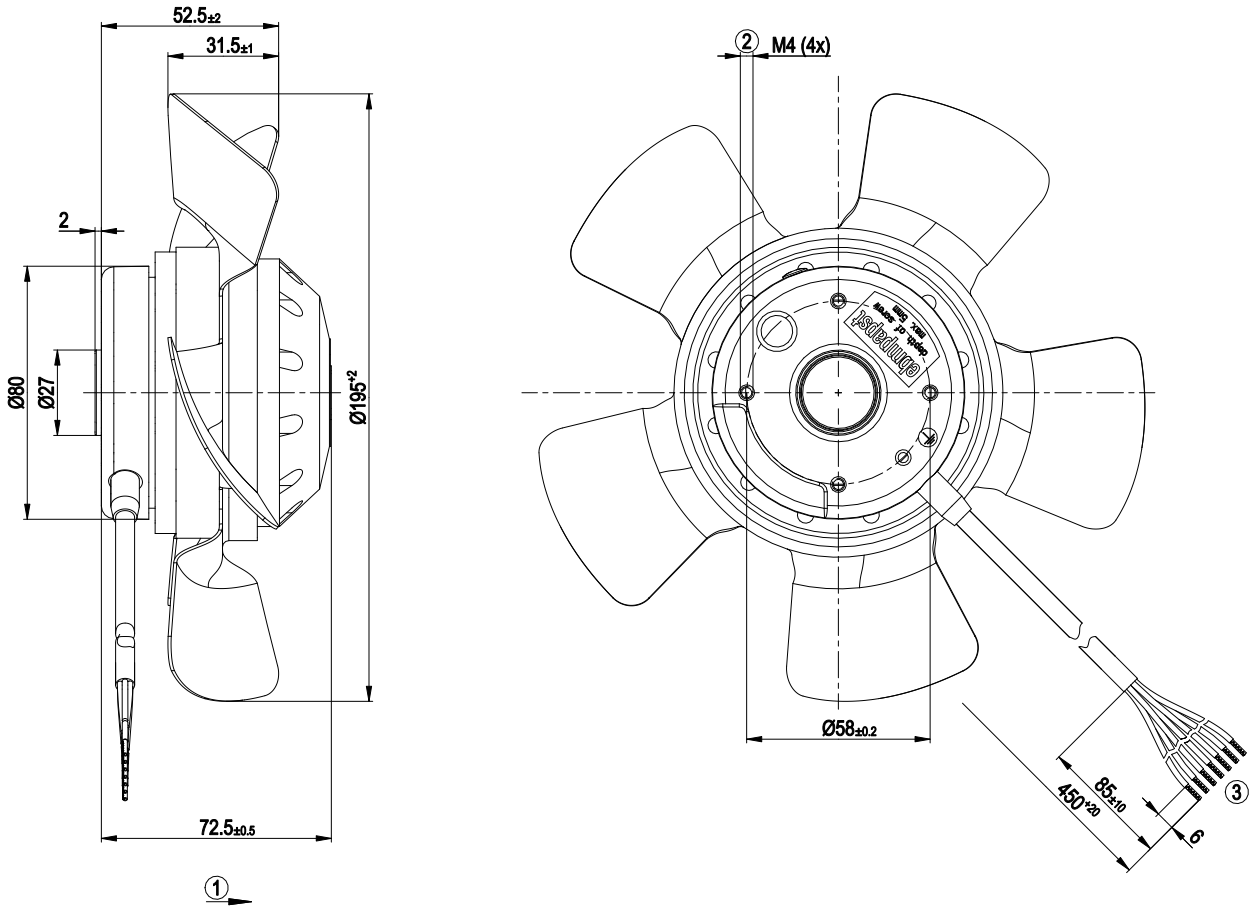

1	Direction of air flow "A"
2	Max. clearance for screw 5 mm
3	Cable PVC 7G 0.5 mm², 7x crimped splices

ebm-papst Mulfingen GmbH & Co. KG · Bachmühle 2 · D-74673 Mulfingen · Phone +49 (0) 7938 81-0 · Fax +49 (0) 7938 81-110 · info1@de.ebmpapst.com · www.ebmpapst.com

AC axial fan

straight blades (A series)

Connection diagram

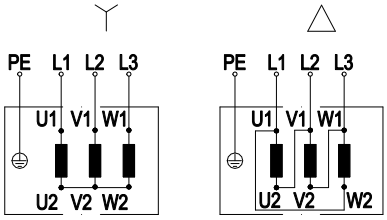

Y	Star connection	Δ	Delta connection	L1	= U1 = black
U2	green	L2	= V1 = blue	V2	white
L3	= W1 = brown	W2	yellow	PE	green/yellow

ebm-papst Mulfingen GmbH & Co. KG · Bachmühle 2 · D-74673 Mulfingen · Phone +49 (0) 7938 81-0 · Fax +49 (0) 7938 81-110 · info1@de.ebmpapst.com · www.ebmpapst.com

AC axial fan

straight blades (A series)

Curves: Air performance 50 Hz

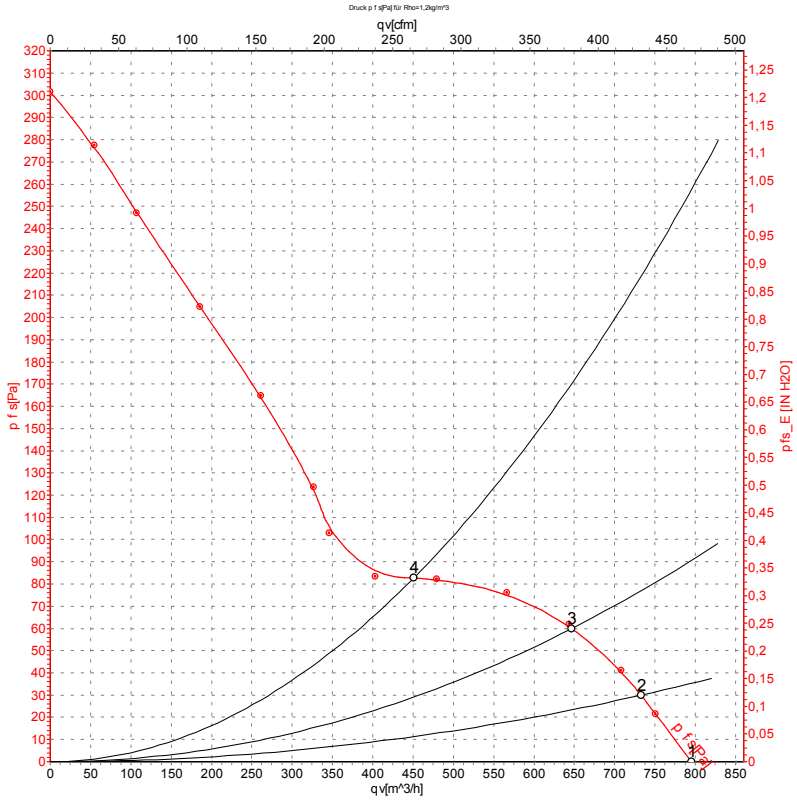

Measurement: LU-58516-1

Air performance measured according to ISO 5801 installation category A. For detailed information on the measurement setup, contact ebm-papst. Intake sound level: Sound power level according to ISO 13347 / sound pressure level measured at 1 m distance from fan axis. The values given are valid under the specified measuring conditions and may vary due to conditions of installation. For deviations from the standard configuration, the parameters have to be checked on the installed unit.

Measured values

	U	f	n	P_e	I	q_V	p_{fs}	q_V	p_{fs}
	V	Hz	min^{-1}	W	A	m^3/h	Pa	cfm	in. wg
1	400	50	2800	53	0.15	800	0	470	0.00
2	400	50	2800	54	0.15	735	30	430	0.12
3	400	50	2800	56	0.15	645	60	380	0.24
4	400	50	2800	52	0.15	450	83	265	0.33

U = Power supply · f = Frequency · n = Speed (rpm) · P_e = Power consumption · I = Current draw · q_V = Air flow · p_{fs} = Pressure increase

ebm-papst Mulfingen GmbH & Co. KG · Bachmühle 2 · D-74673 Mulfingen · Phone +49 (0) 7938 81-0 · Fax +49 (0) 7938 81-110 · info1@de.ebmpapst.com · www.ebmpapst.com

AC axial fan

straight blades (A series)

Curves: Air performance 60 Hz

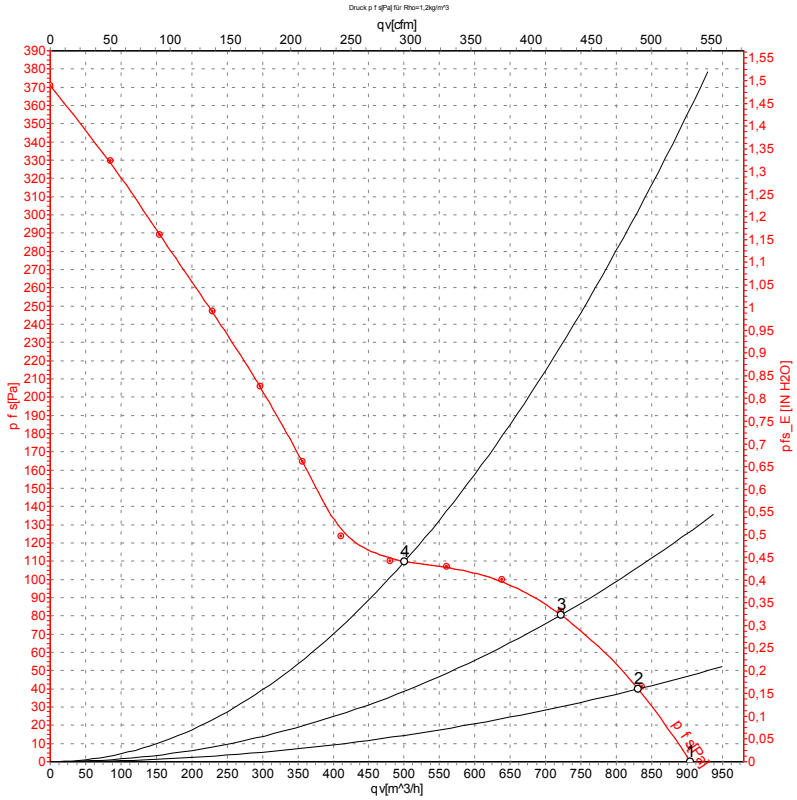

Measurement: LU-58517-1

Air performance measured according to ISO 5801 installation category A. For detailed information on the measurement setup, contact ebm-papst. Intake sound level: Sound power level according to ISO 13347 / sound pressure level measured at 1 m distance from fan axis. The values given are valid under the specified measuring conditions and may vary due to conditions of installation. For deviations from the standard configuration, the parameters have to be checked on the installed unit.

Measured values

	U	f	n	P_e	I	q_V	p_{fs}	q_V	p_{fs}
	V	Hz	min^{-1}	W	A	m^3/h	Pa	cfm	in. wg
1	400	60	3150	70	0.14	910	0	535	0.00
2	400	60	3150	71	0.14	830	40	490	0.16
3	400	60	3150	74	0.14	720	80	425	0.32
4	400	60	3150	69	0.13	500	110	295	0.44

U = Power supply · f = Frequency · n = Speed (rpm) · P_e = Power consumption · I = Current draw · q_V = Air flow · p_{fs} = Pressure increase

ebm-papst Mulfingen GmbH & Co. KG · Bachmühle 2 · D-74673 Mulfingen · Phone +49 (0) 7938 81-0 · Fax +49 (0) 7938 81-110 · info1@de.ebmpapst.com · www.ebmpapst.com