SWITCH TO BE SHIPPED UNASSEMBLED

U2-124			
REV	OCN #	DATE	APR
A	964543	14 NOV 96	RG
B	011867	18 FEB 02	AED

(2)

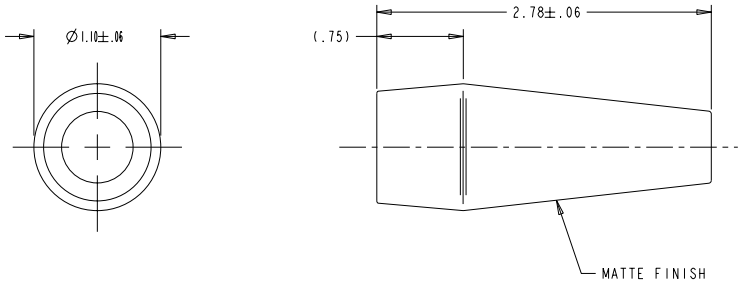

(3)

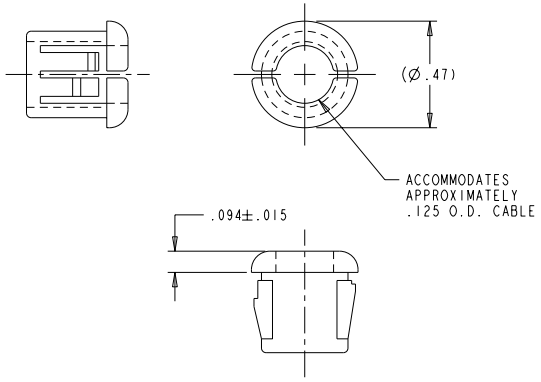

SCALE: 2:1

ELECTRICAL:

RATINGS:	SEA LEVEL		50,000 FT.
LOAD	28 VDC	115 VAC	28 VDC
RESISTIVE	10 AMPS	10 AMPS	———
INDUCTIVE	5 AMPS	5 AMPS	5 AMPS
LAMP	3 AMPS	3 AMPS	———
DWV	1050 VRMS		400 VRMS

ELECTRICAL LIFE: 25,000 CYCLES AT FULL LOAD

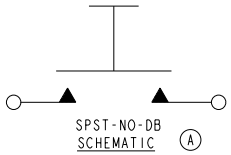

MECHANICAL:

MECHANICAL LIFE: 50,000 CYCLES
TOTAL TRAVEL: .085+.015
OPERATING FORCE: 2.5 +0.3 -1.0 LBS
RESET FORCE: .75 LB. MIN.

PHYSICAL:

TERMPERATURE RANGE: -55° C TO +85° C
ENCLOSURE DESIGN: 2 (DUSTIGHT)
PER MIL-S-8805
BUTTON: RED NYLON
CASE: CLEAR ANODIZED
ALUMINUM ALLOY

(1)

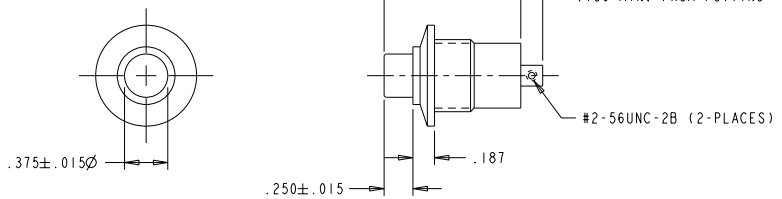

CAUTION

ANY ROTATIONAL FORCE APPLIED TO THE BUTTON IN EXCESS OF 20 IN. OZ. MAY RESULT IN INTERNAL SWITCH DAMAGE.

COMPONENTS TO BE BAGGED AND LABELED:
OTTO
21649
U2-124
DATE CODE

ITEM #	OTTO PART #	QTY.	DESCRIPTION
(1)	119013	1	SWITCH
(2)	400534-2	1	PENDANT
(3)	700178	1	STRAIN RELIEF

☒ MAJOR
■ CRITICAL
▲ SPC CRITICAL

UNLESS OTHERWISE SPECIFIED: DIMENSIONS ARE IN INCHES. TOLERANCES: .XX ±.03, .XXX ±.010, ANGLES ±2° DO NOT SCALE

THIRD ANGLE PROJECTION

OTTO CONTROLS
DIVISION OF
OTTO ENGINEERING INC.
CARPENTERSVILLE, ILLINOIS USA

THIS DOCUMENT IS THE CONFIDENTIAL PROPERTY OF OTTO ENGINEERING, INC.. IT IS PROVIDED ON A RESTRICTED BASIS AND IS NOT TO BE USED IN ANY WAY DETRIMENTAL TO THE INTERESTS OF OTTO ENGINEERING, INC..

DESCRIPTION
CONTROL HANDLE/
P3 SWITCH ASSY.

DRWN. MC	SIZE	FSCM NO	DRAWING NO.	REV.
CHKD. TB	B	21649	U2-124	B
APPD. ZS				
DATE 14-Feb-91	WT.	N/A	Sheet 1 OF 1	