EBC055

Splitter box

ZDO8F039MSS0010H10

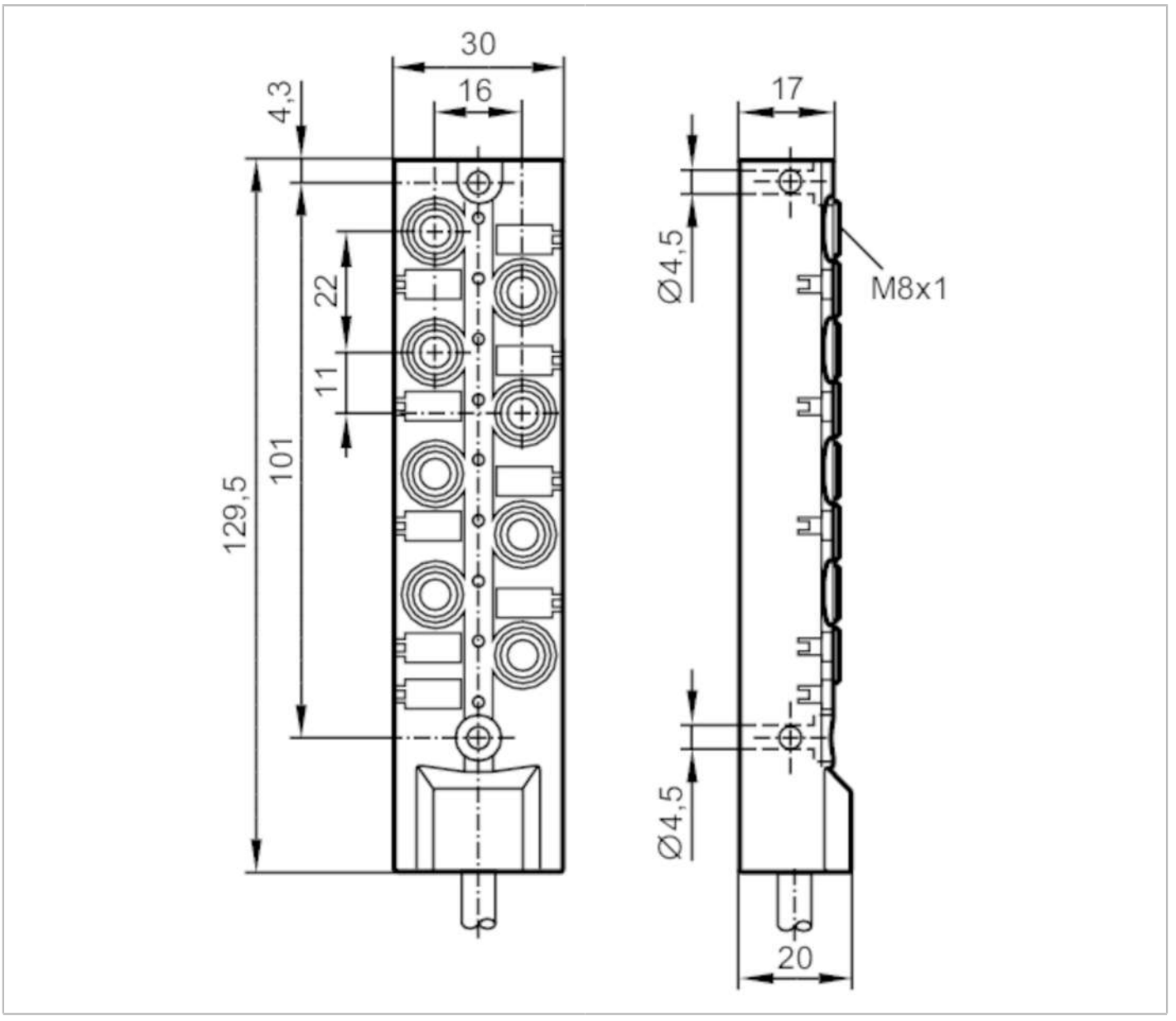

Application		
Special feature		Halogen-free; Gold-plated contacts; Drag chain suitability
Electrical data		
Operating voltage	[V]	10...30 DC; ("supply class 2" to cULus)
Protection class		III
Max. current load per module/slot	[A]	2
Max. current load total	[A]	6
Outputs		
Electrical design		PNP
Operating conditions		
Ambient temperature	[°C]	-25...80

EBC055

Splitter box

ZDO8F039MSS0010H10

Ambient temperature (moving) [°C]			-5...60
Protection			IP 65; IP 67; IP 68
Mechanical data			
Weight [g]			879
Materials			PBT-GF20; brass nickel-plated
Moulded-body material			PBT-GF 20 / brass, nickel-plated
Number of ports splitter box			8
Connector type			M8
Drag chain suitability			yes
Drag chain suitability	bending radius for flexible use		min. 10 x cable diameter
	travel speed		max. 3.3 m/s for a horizontal travel length of 5 m and max. acceleration of 5 m/s²
	bending cycles		> 5 Mio.
	torsional strain		± 180 °/m
Displays / operating elements			
Display	switching status		8 x LED, yellow
	operation		1 x LED, green
Accessories			
Accessories (optional)			DIN rail adapter:, E73007
			Protective cap: M8, E73005
Remarks			
Pack quantity			1 pcs.
Electrical connection			
Cable: 10 m, PUR, Halogen-free, black, Ø 9.1 mm; 8 x 0.34 mm² (43 x Ø 0.1 mm) + 2 x 0.75 mm² (21 x Ø 0.2 mm)			
Electrical connection - slot			
Connector: 8 x M8; coding: A; Moulded body: PBT-GF 20 / brass, nickel-plated; Contacts: gold-plated			

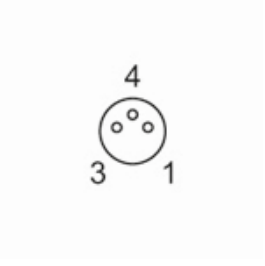

EBC055

Splitter box

ZDO8F039MSS0010H10

Connection

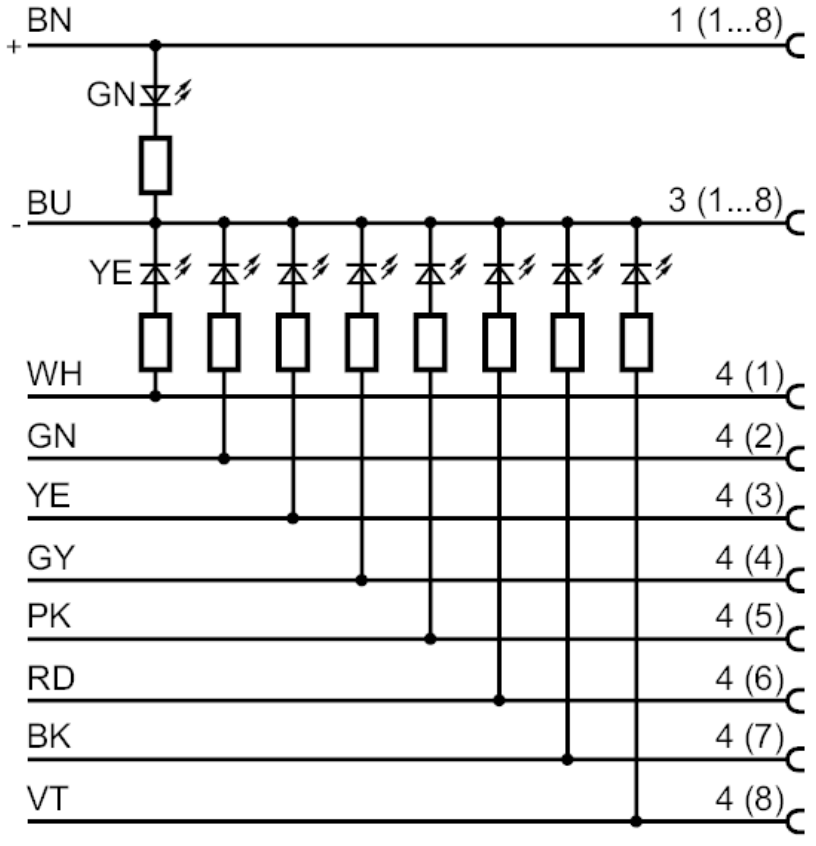

	Core colours :
BK =	black
BN =	brown
BU =	blue
GN =	green
GY =	grey
PK =	pink
RD =	red
VT =	lilac
WH =	white
YE =	yellow