Product datasheet

Specifications



inductive sensor XS1 M30 - PNP NO&NC - Flush - Sn15mm - 12..24VDC - cable 2M

XS130B3PCL2

Discontinued on: 01 November 2020

Discontinued

XS130B3PCL2 has not been replaced. Please contact your customer care centre for more information.

Main

Range of product	Telemecanique Inductive proximity sensors XS
Series name	General purpose
Sensor type	Inductive proximity sensor
Device application	Mobile equipment
Sensor name	XS1
Sensor design	Cylindrical M30
Size	45 mm
Body type	Fixed
Detector flush mounting acceptance	Flush mountable
Material	Metal
Type of output signal	Discrete
Wiring technique	4-wire
[Sn] nominal sensing distance	15 mm
Discrete output function	1 NO + 1 NC
Output circuit type	DC
Discrete output type	PNP
Electrical connection	Cable
Cable length	2 m
[Us] rated supply voltage	12...24 V DC with reverse polarity protection
Switching capacity in mA	<= 200 mA with overload and short-circuit protection
IP degree of protection	IP68 conforming to IEC 60529 IP65

Complementary

Safety level	SIL 2 conforming to EN/IEC 61508 PL = d conforming to EN/ISO 13849-1 SILCL 2 conforming to IEC 62061
Safety reliability data	MTTFd = 1810 years PFHd = 62.9E-9 1/h SFF = 92 %

Disclaimer: This documentation is not intended as a substitute for and is not to be used for determining suitability or reliability of these products for specific user applications

	DC = 74 % with appropriate safety controller
Service life	20 year(s)
Thread type	M30 x 1.5
Detection face	Frontal
Front material	PPS
Enclosure material	Nickel plated brass
Operating zone	0…12 mm
Differential travel	1...15% of Sr
Cable composition	4 x 0.22 mm²
Wire insulation material	PvR
Status LED	Output state: 1 LED (yellow)
Supply voltage limits	9…36 V DC
Switching frequency	<= 500 Hz
Maximum voltage drop	<2 V (closed)
Current consumption	0...10 mA no-load
Maximum delay first up	5 ms
Maximum delay response	0.3 ms
Maximum delay recovery	0.7 ms
Marking	CE
Threaded length	32 mm
Length	45 mm
Net weight	0.16 kg

Environment

Standards	EN/ISO 13849-1 IEC 62061
Product certifications	TÜV UL CSA E2
Ambient air temperature for operation	-25…70 °C
Ambient air temperature for storage	-40…85 °C
Vibration resistance	25 gn amplitude = +/- 2 mm (f = 10…55 Hz) conforming to IEC 60068-2-6
Shock resistance	50 gn for 11 ms conforming to IEC 60068-2-27

Packing Units

Unit Type of Package 1	PCE
Number of Units in Package 1	1
Package 1 Weight	169.0 g
Package 1 Height	4 cm
Package 1 width	11.4 cm
Package 1 Length	16.6 cm
Unit Type of Package 2	S02
Number of Units in Package 2	22
Package 2 Weight	4.09 kg

Package 2 Height	15 cm
Package 2 width	30 cm
Package 2 Length	40 cm

Offer Sustainability

Sustainable offer status	Green Premium product
REACh Regulation	REACh Declaration
EU RoHS Directive	Pro-active compliance (Product out of EU RoHS legal scope) EU RoHS Declaration
Mercury free	Yes
RoHS exemption information	Yes
Environmental Disclosure	Product Environmental Profile
Circularity Profile	End of Life Information

Contractual warranty

Warranty	18 months

Product datasheet XS130B3PCL2

Dimensions Drawings

Dimensions

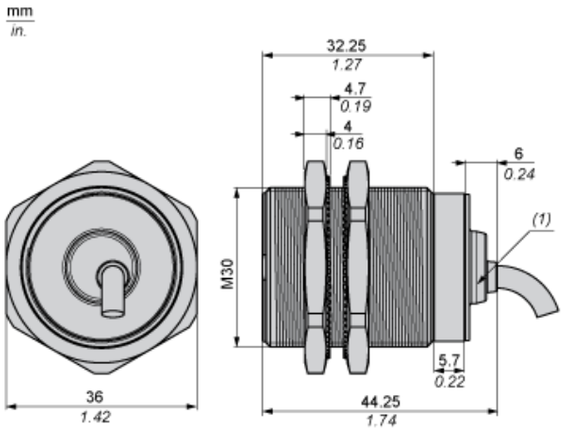

(1) LED

Product datasheet XS130B3PCL2

Mounting and Clearance

Minimum Mounting Distances

Side by side

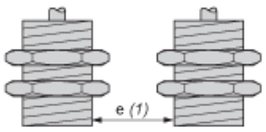

e (1) ≥ 30 mm/1.18 in.

Face to face

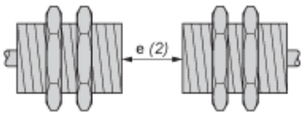

e (2) ≥ 180 mm/7.09 in.

Facing a metal object

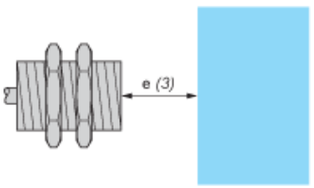

e (3) ≥ 45 mm/1.77 in.

Product datasheet XS130B3PCL2

Connections and Schema

Wiring Schemes

PNP 4-wire

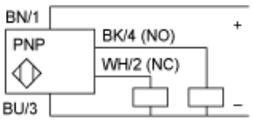

BU : Blue
BN : Brown
BK : Black
WH : White

Performance Curves

Standard Steel Target : 45x45x1 mm

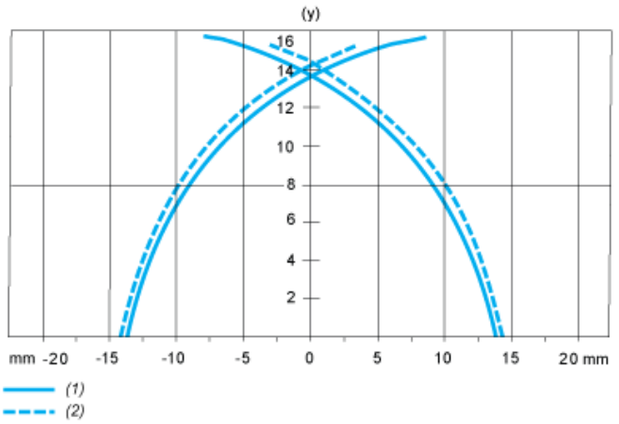

(1) Pick-up points
(2) Drop-out points (object approaching from the side)
(y) Sensing distance in mm