CHV800 Series
HVDC Contactor 800A / 1000VDC



- HVDC 1000A carry current (600s)
- Max. switching current = 3000A / 800VDC
- Contacts sealed in inert gas
- Magnet arc blowout
- Non-polarized power terminals
- Ceramic arc chamber
- Dual coil economiser as standard

UK CA CE RoHS Compliant ✓

Contacts

Contact arrangement		SPST-NO-DM
Contact material		Oxygen Free Copper
Max. switching voltage	AC/DC	1000VDC
Rated load (resistive, cos φ=1)	DC1	800A 1000VDC (break only above 350A)
Max. continuous thermal current at 23°C ambient temperature	600s	1000A (with 300mm² conductors)
	4s	3000A (with 300mm² conductors)
	10ms	8000A (with 300mm² conductors)
Max switching current	(1 time only)	3000A / 800VDC
Initial contact volt drop	max.	240mV @ 800VDC

Coil

Nominal voltage (see page 2)	DC	12VDC, 24VDC (with dual coil economiser)
Rated power consumption	hold	<9W

Insulation

Insulation resistance	initial	≥ 1000MΩ (Min.) (1500VDC, 1 minute)
Dielectric strength	coil to contact	3000Vrms / ≤1mA / 1 min (at sea level)
	between main contacts	4000Vrms / ≤1mA / 1 min (at sea level)

General Data

Operate time at 20°C	max.	50ms
Release time at 20°C	max.	30ms
Bounce time at 20°C	max.	10ms
Electrical life (On: 1s / Off: 9s)	300A 750VDC	≥ 6000 ops.
	600A 750VDC	≥ 600 ops.
	600A 1000VDC	≥ 150 ops
Electrical life	ops.	Voltage and current dependent - see also fig. 1
Mechanical life	ops.	≥ 2 x 10^5

Environmental

Ambient temperature	operating	-40 to +85°C
Relative humidity		5 to 85% RH (No icing, no condensation)
Altitude		≤4000m (derate by 0.83 between 3000 & 4000m)
Shock resistance	impact	>50G, 590m/s²
	stabilty (malfunction <10µs)	On: >20G, 196m/s², 11ms ½ sine
		Off: >10G, 98m/s², 11ms ½ sine
Vibration resistance	sine wave	>5G, 49m/s², 10Hz ~ 500Hz (malfunction <10µs)
Dimensions	L x W x H	145.2 x 66.6 x 132.8mm (max.)
Weight	approx.	1800g

Ordering Code

C H V - 8 0 1

Series

Power terminal options
0: Female, with busbars (std.)
1: Male, no busbars *
2: Female, no busbars *

Coil voltage (see Table 1)
1: 12VDC
2: 24VDC

* Consult factory

Specifications are subject to change without notice. E&OE.

Coil Data

Table 1

Order code	Nominal voltage (VDC)	Must operate voltage max. (VDC)	Max. allowable voltage (VDC)	Must hold voltage max.* (VDC)	Must release voltage min. (VDC)	Inrush Current ±10% (A)	Hold Current ± 10%(A)	Rated Coil Power
CHV-801	12	9	16	7.8	1.0	4.2	0.75	9W (Hold)
CHV-802	24	18	32	15.6	2.0	2.1	0.375	50W, 0.2s (Operate)

Twin coil economiser standard. No additional coil back emf suppresion required. Other coils available upon special request.

* Max. Non-release voltage @ 85ºC and max. continuous current load, pre-energized at 1.1Un

Electrical Performance

Fig. 1

Estimated Life

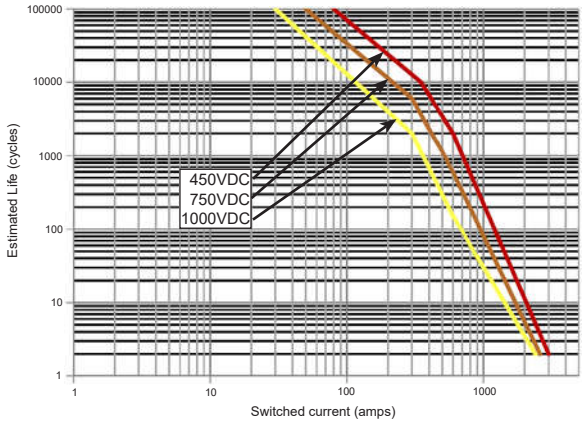

Estimates are based on tests and extrapolated data.
The user is advised to confirm the performance in their application.

Endurance

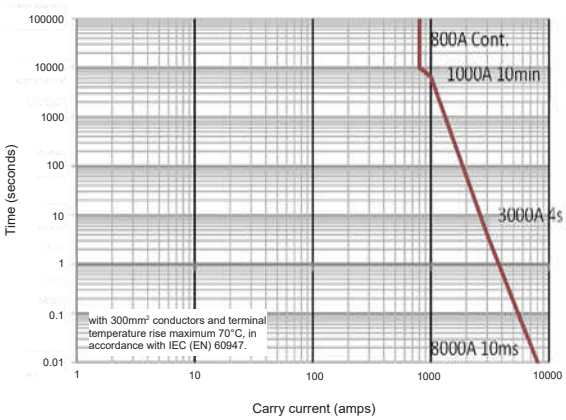

The above data is tested at 85ºC ambient temperature.

Dimensions

Fig. 2

Busbar terminals
(standard)

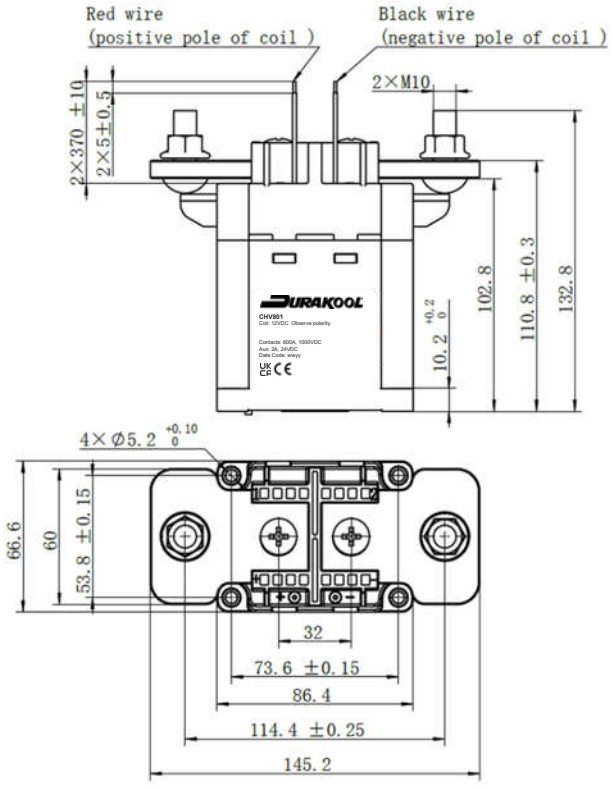

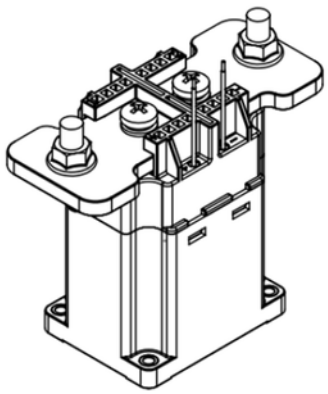

Circuit Diagram

Fig. 3

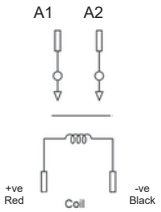

Contact terminals are not polarized.

Coil terminals are polarised.

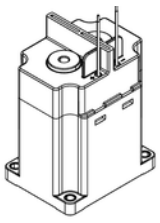

Female terminals
(consult factory)

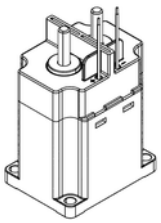

Male stud terminals
(consult factory)

Notes:
1: Note coil polarity
3: Nominal dimensions in mm.
4: Tolerances (nominal), <10mm: ± 0.3mm, 10 ~ 50mm: ± 0.6mm, >50mm: ± 1.0mm.
5. Coil wire length = 370mm ± 10mm

7: Recommended minimum conductor: 300mm²
Preferred conductor: 320mm²

8: Torque settings
Terminals: 9.0-12.0Nm
Base Mounting: 1.8 to 3.5Nm

Specifications are subject to change without notice. E&OE.