D2E146-HT59-02

AC centrifugal fan

forward curved, dual inlet

with housing (flange)

ebm-papst Mulfingen GmbH & Co. KG
Bachmühle 2 · D-74673 Mulfingen
Phone +49 7938 81-0
Fax +49 7938 81-110
info1@de.ebmpapst.com
www.ebmpapst.com

Limited partnership · Headquarters Mulfingen
County court Stuttgart · HRA 590344

General partner Elektrobau Mulfingen GmbH · Headquarters Mulfingen
County court Stuttgart · HRB 590142

ErP2015 EXCEEDS THE NORM

Nominal data

Type	**D2E146-HT59-02**
Motor	**M2E068-EC**

Phase		1~	1~
Nominal voltage	VAC	230	230
Frequency	Hz	50	60
Type of data definition		fa	fa
Valid for approval / standard		CE	CE
Speed	min^{-1}	1600	1500
Power input	W	290	320
Current draw	A	1.28	1.4
Motor capacitor	µF	6	6
Capacitor voltage	VDB	400	400
Capacitor standard		P2 (CE)	P2 (CE)
Min. ambient temperature	°C	-25	-25
Max. ambient temperature	°C	50	40
Starting current	A	1.48	1.5

ml = Max. load · me = Max. efficiency · fa = Running at free air · cs = Customer specs · cu = Customer unit
Subject to alterations

Data according to ErP directive

Installation category	A
Efficiency category	Static
Variable speed drive	No
Specific ratio*	1.00

* Specific ratio = 1 + p_{fs} / 100 000 Pa

		Actual	Request 2013	Request 2015
Overall efficiency η_{es}	%	33.3	26.3	33.3
Efficiency grade N		44	37	44
Power input P_e	kW	0.2		
Air flow q_v	m^3/h	630		
Pressure increase p_{fs}	Pa	379		
Speed n	min^{-1}	2410		

Data definition with optimum efficiency. LU-156752
The ErP data is determined using a motor-impeller combination in a standardised measurement configuration.

ebmpapst

AC centrifugal fan

forward curved, dual inlet

with housing (flange)

Technical features

Mass	3.4 kg
Size	146 mm
Surface of rotor	Partially cast in aluminium
Material of terminal box	PP plastic, black
Material of impeller	Sheet steel, hot-dip galvanised
Housing material	PP plastic, black
Motor suspension	Motor mounted anti-vibration on both sides
Direction of rotation	Counter-clockwise, seen on rotor
Type of protection	IP 20
Insulation class	"F"
Humidity class	F0
Max. permissible ambient motor temp. (transp./ storage)	+ 80 °C
Min. permissible ambient motor temp. (transp./storage)	- 40 °C
Mounting position	Any
Condensate discharge holes	None, open rotor
Operation mode	S1
Motor bearing	Ball bearing
Speed steps	4
Touch current acc. IEC 60990 (measuring network Fig. 4, TN system)	< 0.75 mA
Electrical leads	With plug; Via terminal box, integrated capacitor connected via terminal box
Motor protection	Thermal overload protector (TOP) wired internally
Cable exit	Variable
Protection class	I (if protective earth is connected by customer)
Product conforming to standard	EN 60335-2-31; CE
Approval	VDE

ebm-papst Mulfingen GmbH & Co. KG · Bachmühle 2 · D-74673 Mulfingen · Phone +49 (0) 7938 81-0 · Fax +49 (0) 7938 81-110 · info1@de.ebmpapst.com · www.ebmpapst.com

AC centrifugal fan

forward curved, dual inlet

with housing (flange)

Product drawing

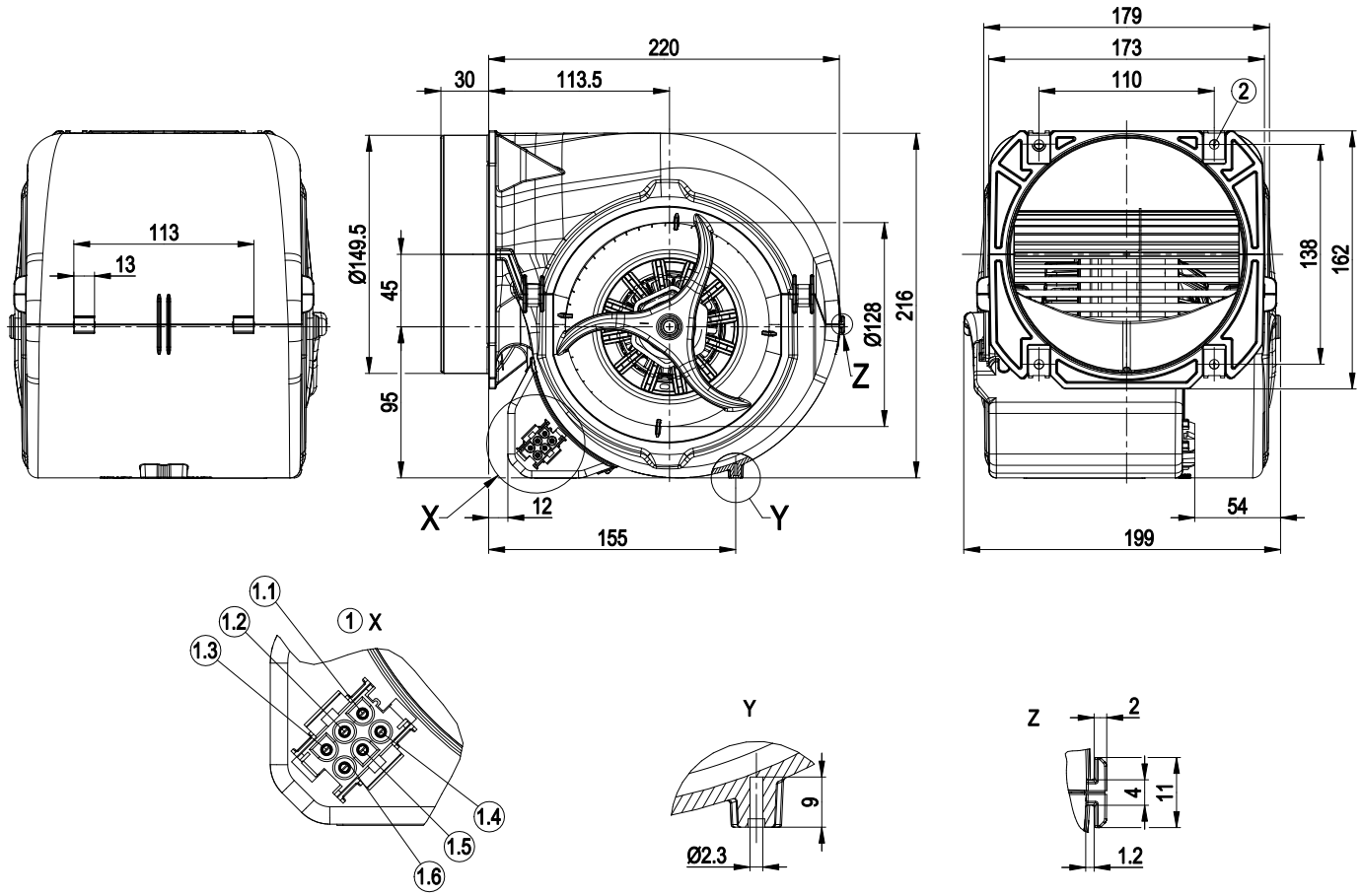

1	Coded plug system AMP Universal-Mate-N-Lok; connector housing: AMP 926 682-3; 6x plug pin AMP 926 886-1
1.1	L = Level 1
1.2	L = Level 2
1.3	L = Level 3
1.4	L = Level 4
1.5	N
1.6	Protective earth
2	4x sheet metal nut for thread EN ISO 1478-ST 4.8 (min. screw length 14.5 mm plus thickness of mounting material)

ebm-papst Mulfingen GmbH & Co. KG · Bachmühle 2 · D-74673 Mulfingen · Phone +49 (0) 7938 81-0 · Fax +49 (0) 7938 81-110 · info1@de.ebmpapst.com · www.ebmpapst.com

AC centrifugal fan

forward curved, dual inlet

with housing (flange)

Connection screen

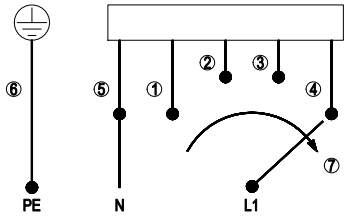

When changing speeds, switch must break the circuit

1	Step 1 (min.)	2	Step 2	3	Step 3
4	Step 4 (max.)	5	N	6	PE protective earth
7	Speed increase				

ebm-papst Mulfingen GmbH & Co. KG · Bachmühle 2 · D-74673 Mulfingen · Phone +49 (0) 7938 81-0 · Fax +49 (0) 7938 81-110 · info1@de.ebmpapst.com · www.ebmpapst.com

AC centrifugal fan

forward curved, dual inlet

with housing (flange)

Charts: Air flow 50 Hz

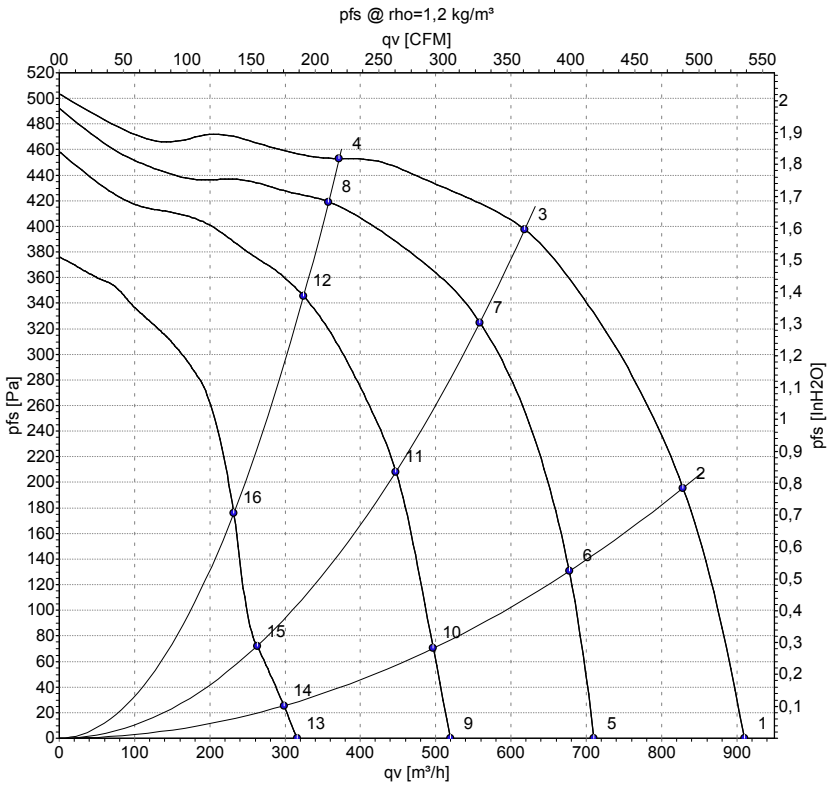

Measurement: LU-156752
Measurement: LU-156754
Measurement: LU-156757
Measurement: LU-156762

Air performance measured as per ISO 5801 Installation category A. For detailed information on the measuring set-up, please contact ebm-papst. Suction-side noise levels: LwA measured as per ISO 13347 / LpA measured with 1m distance to fan axis. The values given are valid under the measuring conditions mentioned above and may vary according to the actual installation situation. With any deviation from the standard set-up, the specific values have to be checked and reviewed with the unit installed.

Measured values

	U	f	n	P_e	I	LpA_{in}	LwA_{in}	qv	p_{fs}
	V	Hz	min^{-1}	W	A	dB(A)	dB(A)	m^3/h	Pa
1	230	50	1600	290	1.28	62	73	910	0
2	230	50	2020	256	1.12	61	73	830	200
3	230	50	2420	203	0.89	60	72	620	400
4	230	50	2645	161	0.70	63	74	370	450
5	230	50	1280	247	1.08	56	67	710	0
6	230	50	1665	226	0.99	56	68	675	133
7	230	50	2210	183	0.83	59	70	560	325
8	230	50	2550	140	0.66	63	74	360	421
9	230	50	960	203	0.89	48	59	520	0
10	230	50	1235	196	0.87	49	60	495	70
11	230	50	1805	174	0.78	53	65	445	214
12	230	50	2330	133	0.63	60	71	325	345
13	230	50	595	163	0.72	36	47	315	0
14	230	50	765	160	0.71	36	47	300	26
15	230	50	1065	154	0.68	40	52	265	72
16	230	50	1675	138	0.63	51	62	230	181

U = Supply voltage · f = Frequency · n = Speed · P_e = Power input · I = Current draw · LpA_{in} = Sound pressure level inlet side · LwA_{in} = Sound power level inlet side · qv = Air flow
p_{fs} = Pressure increase

ebm-papst Mulfingen GmbH & Co. KG · Bachmühle 2 · D-74673 Mulfingen · Phone +49 (0) 7938 81-0 · Fax +49 (0) 7938 81-110 · info1@de.ebmpapst.com · www.ebmpapst.com

AC centrifugal fan

forward curved, dual inlet

with housing (flange)

Charts: Air flow 60 Hz

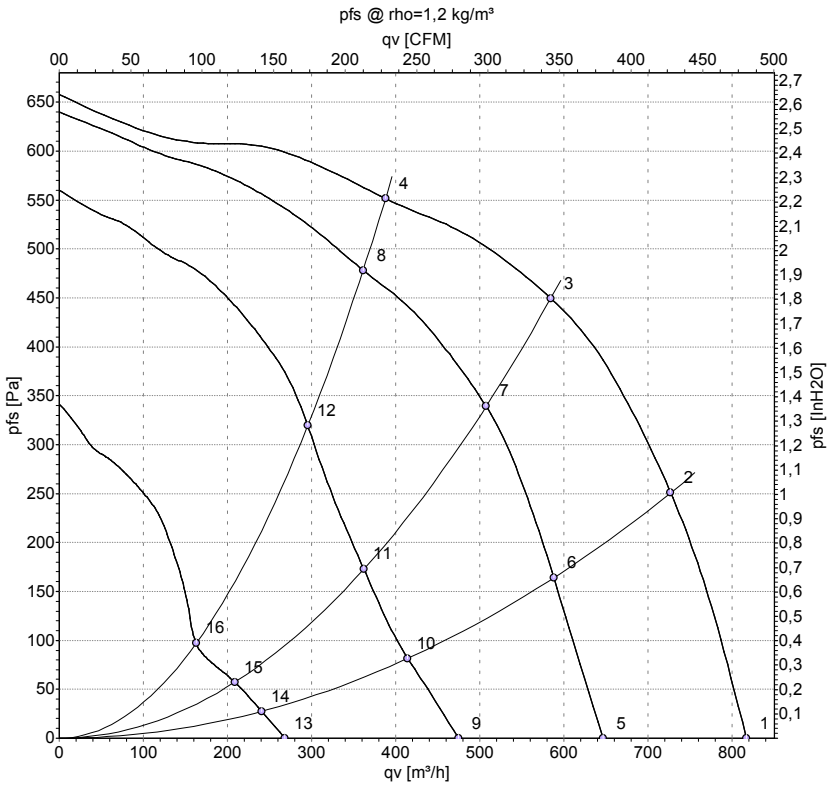

Measurement: LU-156771
Measurement: LU-156772
Measurement: LU-156773
Measurement: LU-156774

Air performance measured as per ISO 5801 Installation category A. For detailed information on the measuring set-up, please contact ebm-papst. Suction-side noise levels: LwA measured as per ISO 13347 / LpA measured with 1m distance to fan axis. The values given are valid under the measuring conditions mentioned above and may vary according to the actual installation situation. With any deviation from the standard set-up, the specific values have to be checked and reviewed with the unit installed.

Measured values

	U	f	n	P_e	I	LpA_{in}	LwA_{in}	qv	p_{fs}
	V	Hz	min^{-1}	W	A	dB(A)	dB(A)	m^3/h	Pa
1	230	60	1500	320	1.40	60	71	815	0
2	230	60	2085	296	1.28	60	71	725	250
3	230	60	2570	267	1.17	62	73	585	450
4	230	60	2930	236	1.06	65	77	390	550
5	230	60	1170	254	1.11	54	65	645	0
6	230	60	1685	244	1.08	54	66	590	164
7	230	60	2260	221	1.01	59	70	505	339
8	230	60	2720	188	0.92	64	75	360	477
9	230	60	875	204	0.92	46	57	475	0
10	230	60	1225	197	0.89	46	56	415	81
11	230	60	1640	192	0.88	51	62	360	173
12	230	60	2255	169	0.82	59	70	295	320
13	230	60	515	157	0.72	29	40	270	0
14	230	60	730	153	0.70	30	41	240	28
15	230	60	955	151	0.69	36	47	210	57
16	230	60	1245	147	0.68	42	53	165	93

U = Supply voltage · f = Frequency · n = Speed · P_e = Power input · I = Current draw · LpA_{in} = Sound pressure level inlet side · LwA_{in} = Sound power level inlet side · qv = Air flow
p_{fs} = Pressure increase

ebm-papst Mulfingen GmbH & Co. KG · Bachmühle 2 · D-74673 Mulfingen · Phone +49 (0) 7938 81-0 · Fax +49 (0) 7938 81-110 · info1@de.ebmpapst.com · www.ebmpapst.com