Reservoir, Series AS5-CBS

2024-03-20

R412009352

Series AS5

Qn = 14500 l/min



Technical data

Industry	Industrial
Parts	Reservoir
Reservoir	reservoir, polycarbonate, with PA protective guard
Lubricator reservoir volume	181 cm³
Min. working pressure	0 bar
Max. working pressure	16 bar
Min. ambient temperature	-10 °C
Max. ambient temperature	50 °C
Min. medium temperature	-10 °C
Max. medium temperature	50 °C
Medium	Compressed air Oil
Weight	0.335 kg

Material

Material reservoir	Polycarbonate
Material protective guard	Polyamide
Seal material	Acrylonitrile butadiene rubber
Part No.	R412009352

Technical information

The pressure dew point must be at least 15 °C less than ambient and medium temperature and may not exceed 3 °C.

The oil content of compressed air must remain constant during the life cycle.

Use only the approved oils from AVENTICS. Further information can be found in the “Technical information” document (available in https://www.emerson.com/en-us/support).

Dimensions

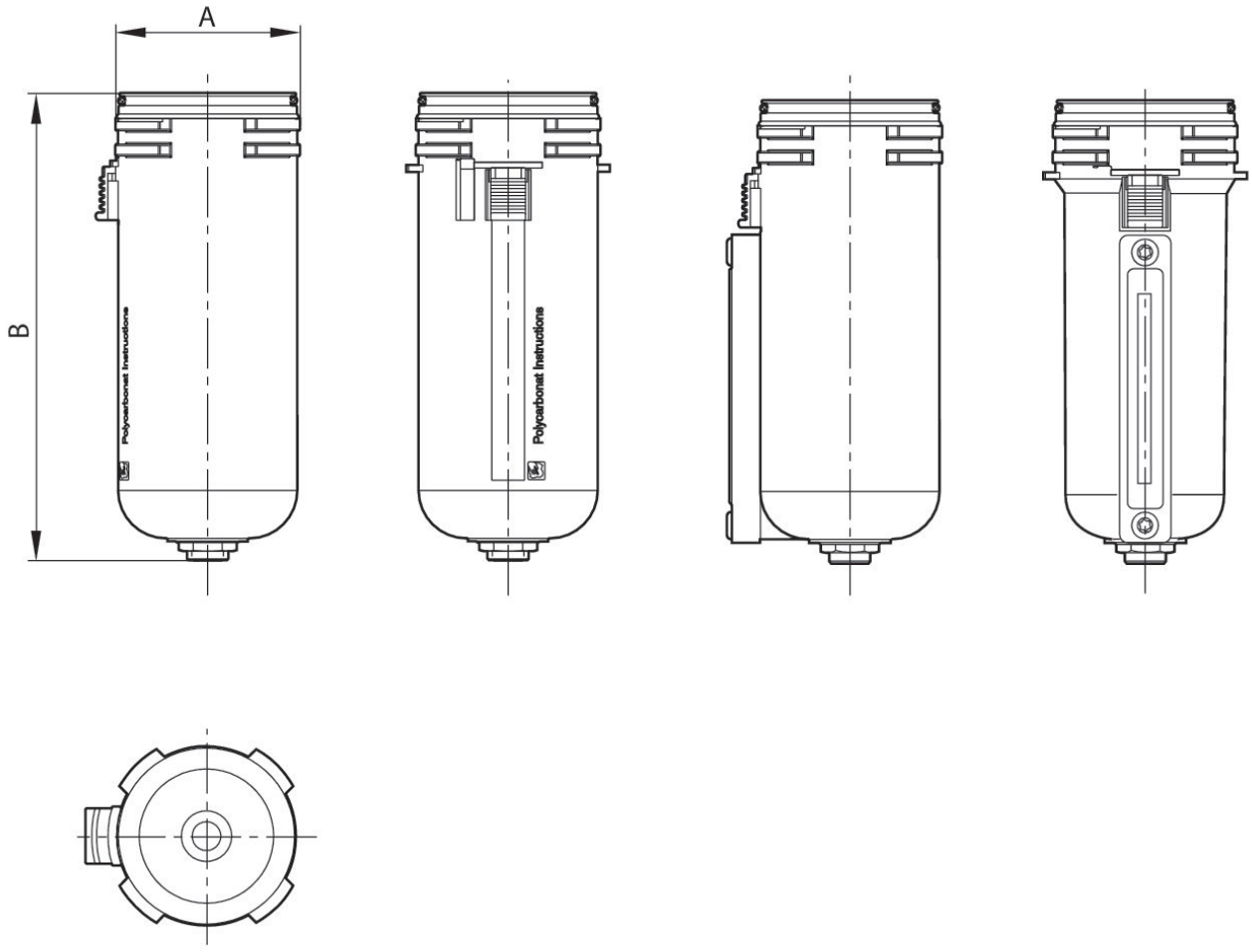

Part No.	A	B
R412009351	60	154.8
R412009352	60	154.8

Reservoir, Series AS5-CBS

2024-03-20

R412009352

Part No.	A	B
R412009358	60	154.8