21100-662 SLEEVES FOR M2.5, STAINLESS STEEL; 100 PIECES



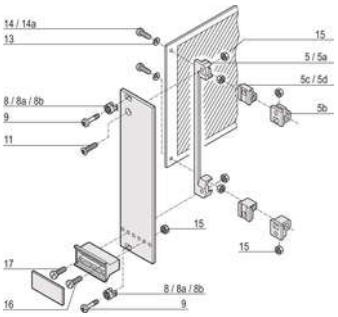

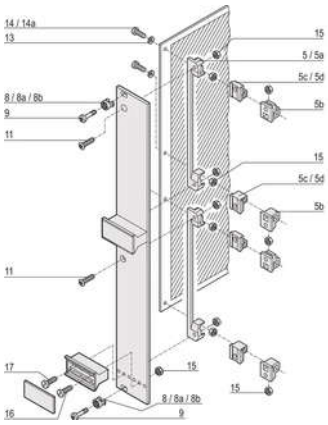

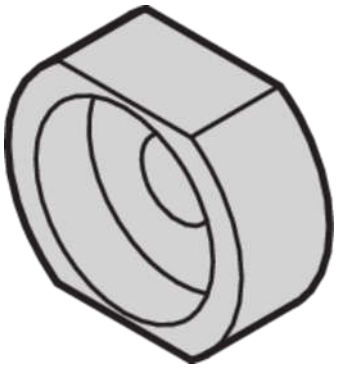

KEY FEATURES

- Sleeve guides the collar screw when fastening the front panel
- Sleeve is inserted into the elongated hole of the front panel

PRODUCT ATTRIBUTES

- Product Type: Sleeve
- Works With: Front Panels
- Package Quantity: 100
- Depth: 4.4 mm
- Height: 6 mm
- Material: Stainless Steel

Width: 8 mm

ADDITIONAL PRODUCT DETAILS

Sleeve guides the collar screw when fastening the front panel.

Metal sleeves on the partial front panels must be pressed in.

All sleeves can be used for front panel > 2 HP.

CERTIFICATIONS



North America
All locations
+1.763.422.2661
Chat with us:
schroff.nvent.com

Europe
Straubenhardt, Germany
+49.7082.794.0
Betschdorf, France
+33.3.88.90.64.90
Warsaw, Poland
+48.22.209.98.35
Assago, Italy
+39.02.932.7141
Chat with us:
schroff.nvent.com

Asia
Shanghai, China
+86.21.2412.6943
Qingdao, China
+86.532.8771.6101
Singapore
+65.6768.5800
Shin-Yokohama, Japan
+81.45.476.0271
Chat with us:
schroff.nvent.com

Middle East & India
Dubai, United Arab Emirates
+971.4.378.1700
Bangalore, India
+91.80.6715.2001
Istanbul, Turkey
+90.216.250.7374
Chat with us:
schroff.nvent.com

nVent

Our powerful portfolio of brands:
nVent.com CADDY ERICO HOFFMAN RAYCHEM SCHROFF TRACER

© 2023 nVent. All nVent marks and logos are owned or licensed by nVent Services GmbH or its affiliates. All other trademarks are the property of their respective owners.

nVent reserves the right to change specifications without notice.