I22008

Inductive sensor

SIY-2120-ABOW/LS/A-PLATE

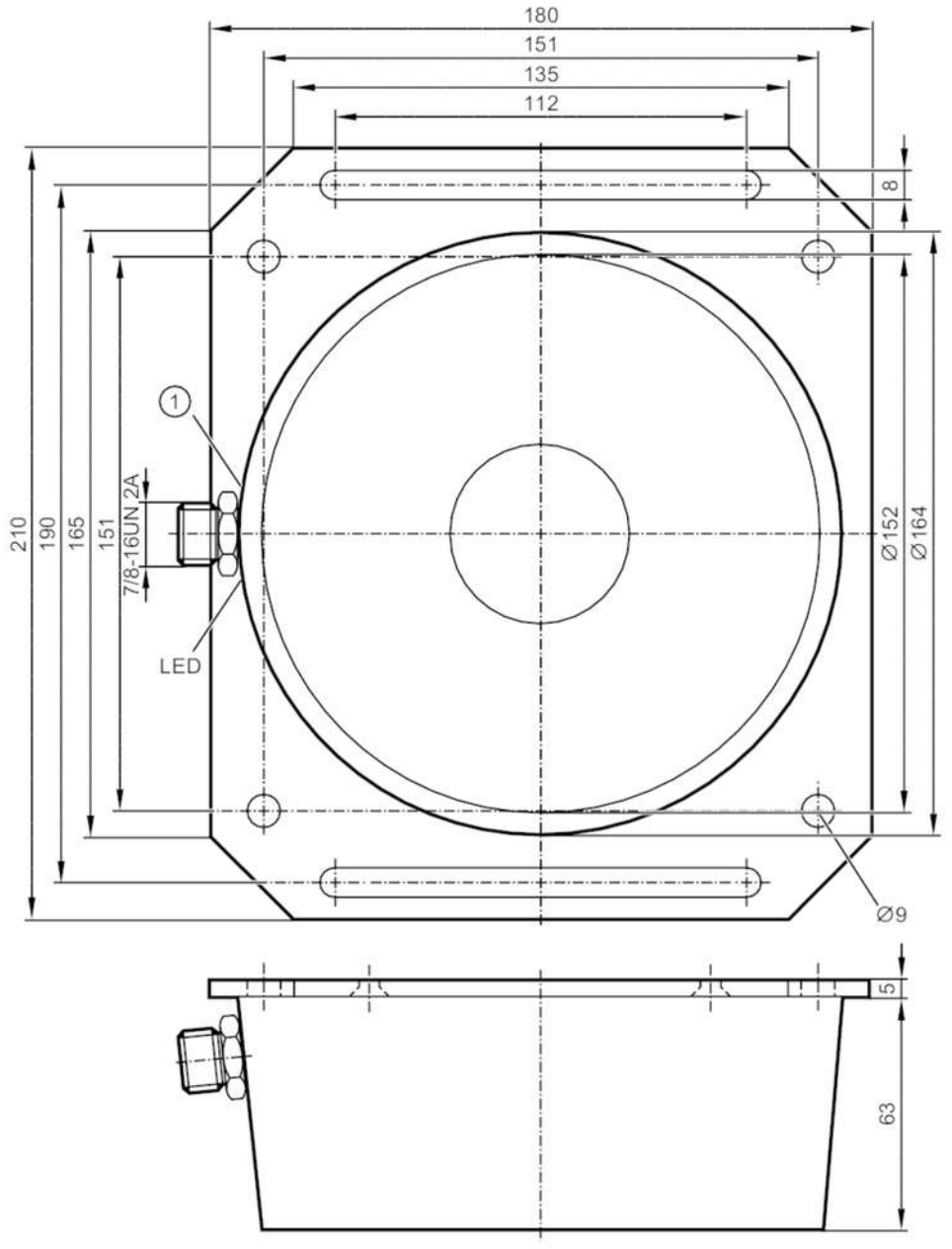

1 potentiometer

Product characteristics		
Output function		normally open
Sensing range	[mm]	30...120
Housing		cylindrical
Dimensions	[mm]	Ø 164 / L = 68
Electrical data		
Frequency AC	[Hz]	47...63
Operating voltage	[V]	90...250 AC
Protection class		I

I22008

Inductive sensor

SIY-2120-ABOW/LS/A-PLATE

Reverse polarity protection			no
Outputs			
Output function			normally open
Max. voltage drop switching output AC	[V]		11
Minimum load current	[mA]		15
Max. leakage current	[mA]		6
Permanent current rating of switching output AC	[mA]		200; (250 (...50 °C))
Short-time current rating of switching output	[mA]		1500; (10 ms / 0,5 Hz)
Switching frequency AC	[Hz]		3
Short-circuit proof			no
Overload protection			no
Detection zone			
Sensing range	[mm]		30...120
Sensing range adjustable			yes
Factory setting sensing range	[mm]		120
Real sensing range Sr	[mm]		120 ± 10 %
Accuracy / deviations			
Correction factor			steel: 1 / stainless steel: 0.7 / brass: 0.4 / aluminium: 0.3 / copper: 0.2
Hysteresis	[% of Sr]		< 15
Switch point drift	[% of Sr]		-15...15
Operating conditions			
Ambient temperature	[°C]		-20...70
Protection			IP 65
Tests / approvals			
EMC		EN 60947-5-2	
Mechanical data			
Weight	[g]		1578
Housing			cylindrical
Mounting			non-flush mountable
Type of mounting			with mounting plate
Dimensions	[mm]		Ø 164 / L = 68
Materials			housing: PBT; Mounting plate: aluminium anodised
Displays / operating elements			
Display		switching status	1 x LED, yellow
Electrical connection			
Required protection			miniature fuse to IEC60127-2 sheet 1; ≤ 2 A; fast acting
Remarks			
Remarks			Recommendation: Check the safe functioning of the unit after a short circuit.
Pack quantity			1 pcs.

I22008

Inductive sensor

SIY-2120-ABOW/LS/A-PLATE

Electrical connection - plug

Connector: 1 x 7/8"; coding: A



Connection

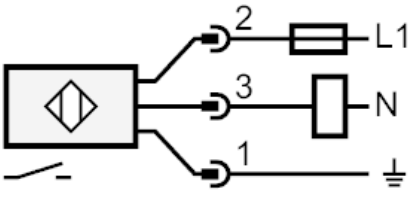

Note miniature fuse to IEC60127-2 sheet 1 ≤ 2 A fast acting