# Datasheet - MZM 100 ST2-1P2PWRE-A

Solenoid interlock / MZM 100

☒ Preferred typ



(Minor differences between the printed image and the original product may exist!)

- Guard locking monitored
- Automatic latching
- Solenoid interlocks (for the protection of man) with innovating and unique operating principle
- 40 mm x 179 mm x 40 mm
- Electronic contact-free, coded system
- thermoplastic enclosure
- Max. length of the sensor chain 200 m
- 3 LEDs to show operating conditions
- Sensor technology permits an offset between actuator and interlock of ± 5 mm vertically and ± 3 mm horizontally
- Intelligent diagnosis
- Self-monitoring series-wiring of 31 sensors
- Patented
- Connector M12, 8-pole
- Power to lock

## Ordering details

| | |
|---|---|
| Product type description | MZM 100 ST2-1P2PWRE-A |
| Article number | 101211066 |
| EAN code | 4030661389127 |
| eCl@ss | 27-27-26-03 |

## Approval

| | |
|---|---|
| Approval | BG<br>USA/CAN |

## Classification

| | |
|---|---|
| Standards | EN ISO 13849-1, IEC 61508, IEC 60947-5-3, EN 60947-5-1 |
| PL | e |
| Control category | up 4 |
| PFH | 3.5 x $10^{-9}$/h |
| SIL | up 3 |
| Mission time | 20 Years |
| Classification | PDF-M |

## Global Properties

| | |
|---|---|
| Product name | MZM 100 |
| Standards | IEC 61508, EN ISO 13849-1, EN ISO 13849-1 |
| Compliance with the Directives (Y/N) CE | Yes |
| Suitable for safety functions (Y/N) | Yes |
| Protection rating | II |
| Series-wiring | up to 31 components |
| Length of the sensor chain | max. 200 m |
| − without detriment to the category to EN ISO 13849-1 | |
| Active principle | inductive |
| Duty cycle | 100 % |
| Materials | |
| - Material of the housings | Plastic, glass-fibre reinforced thermoplastic |
| Housing coating | None |
| Weight | 645 g |
| Guard locking monitored (Y/N) | Yes |
| Actuator monitored (Y/N) | No |
| Idle assignable pushbutton and LED (Y/N) | No |
| Reaction time | < 150 ms |
| Duration of risk | < 150 ms |
| Time to readiness | < 4000 ms |
| Recommended actuator | MZM 100-B1.1 |

## Mechanical data

| | |
|---|---|
| Design of electrical connection | Connector M12, 8-pole |
| Mechanical life | ≥ 1.000.000 operations |
| notice - Mechanical life | operations for guards $\leq 5$ kg;<br>actuating speed $\leq 0{,}5$ m/s |
| restistance to shock | 30 g / 11 ms |
| Resistance to vibration | 10 … 150 Hz, Amplitude 0,35 mm |
| Emergency unlocking device (Y/N) | No |
| Manual release (Y/N) | No |
| Emergency release (Y/N) | No |
| Latching (Y/N) | Yes |
| electrically adjustable latching force | 30 N … 100 N |
| Permanent magnet | - |
| Clamping force $F_{max}$ | |
| - typically | 750 N |
| - guaranteed | 500 N |

## Ambient conditions

| | |
|---|---|
| Ambient temperature | |
| - Min. environmental temperature | −25 °C |
| - Max. environmental temperature | +55 °C |
| Storage and transport temperature | |
| - Min. Storage and transport temperature | −25 °C |
| - Max. Storage and transport temperature | +85 °C |
| Relative humidity | 30% ... 95% |
| - non-condensing | |
| - non-icing | |
| Protection class | IP67 to IEC/EN 60529 |
| Air clearances and creepage distances To IEC/EN 60664-1 | |

| | |
|---|---|
| - Rated impulse withstand voltage $U_{imp}$ | 0,8 kV |
| - Overvoltage category | III |
| - Degree of pollution | 3 |

## Electrical data

| | |
|---|---|
| Number of auxiliary contacts | 0 piece |
| Number of safety contacts | 2 piece |
| Cross circuit/short circuit recognition possible (Y/N) | Yes |
| Power to unlock | No |
| Power to lock | Yes |
| Supply voltage $U_B$ (stabilised PELV) | |
| - Min. supply voltage | 20.4 VDC |
| - Max. supply voltage | 26.4 VDC |
| Switch frequency | 1 Hz |
| Rated insulation voltage $U_i$ | 32 VDC |
| Operating current $I_e$ | 1 A |
| Utilisation category | DC-13 |
| No-load current $I_0$ | max. 0,5 A |
| Required rated short-circuit current | 100 A |
| Device insulation | ≤ 2 A (if used in accordance with UL 508) |
| notice | Cable length and cable section alter the voltage drop depending on the output current |

## Electrical data - Safety inputs

| | |
|---|---|
| Safety inputs | X1 and X2 |
| Rated operating voltage $U_e$ | −3 V … 5 V ( Low)<br>15 V … 30 V ( High) |
| Operating current $I_e$ | > 2 mA / 24 V |

## Electrical data - Safety outputs

| | |
|---|---|
| Safety outputs | Y1 and Y2 |
| Fuse rating | short-circuit proof, p-type |
| Rated operating voltage | 0 V ... 4 V under Supply voltage $U_B$ |
| Residual current $I_r$ | ≤ 0,5 mA |
| Operating current $I_e$ | 0,25 A |
| Utilisation category | DC-12, DC-13 |

## Electrical data - Diagnostic output

| | |
|---|---|
| Serial diagnostics (Y/N) | No |
| Fuse rating | p-type, short-circuit proof |
| Rated operating voltage | −3 V … 5 V ( Low)<br>15 V … 30 V ( High) |
| Operating current $I_e$ | 0,05 A |
| Utilisation category | DC-12, DC-13 |
| Wiring capacitance for serial diagnostics | - |
| diagnostic signals | guard door closed |
| Operating principle of the diagnostic output | The short-circuit proof diagnostic output OUT can be used for central visualisation or control tasks, e.g. in a PLC. |
| notice | The diagnostic output is not a safety-relevant output! |

## Electrical data - Solenoid control IN

| | |
|---|---|
| Rated operating voltage $U_e$ | −3 V … 5 V ( Low)<br>15 V … 30 V ( High) |
| Operating current $I_e$ | typically 10 mA / 24 V, dynamically 20 mA |

## LED switching conditions display

| | |
|---|---|
| LED switching conditions display (Y/N) | Yes |
| LED switching conditions display | |
| - Supply voltage $U_B$ | green LED |
| - switching condition | yellow LED |
| - Error functional defect | red LED |

## ATEX

| | |
|---|---|
| Explosion protection categories for gases | None |
| Explosion protected category for dusts | None |

## Dimensions

| | |
|---|---|
| Dimensions of the sensor | |
| - Width of sensor | 40 mm |
| - Height of sensor | 179 mm |
| - Length of sensor | 40 mm |

## Pin assignment

| | |
|---|---|
| 1 | A1 Supply voltage $U_B$ |
| 2 | X1 Safety input 1 |
| 3 | A2 GND |
| 4 | Y1 Safety output 1 |
| 5 | OUT Diagnostic output |
| 6 | X2 Safety input 2 |
| 7 | Y2 Safety output 2 |
| 8 | IN Solenoid control |
| 9 | without function |

## notice

As lons as the actuating unit remains inserted in the solenoid interlock, the unlocked safety guard can be relocked. The safety outputs then will be enabled again; opening the safety guard therefore is not required.

## Included in delivery

Actuators must be ordered separately.

## Ordering code

MZM 100

**Guard locking monitored**

**MZM 100 (1)-(2)(3)(4)-A**

| | |
|---|---|
| **(1)** | |
| **ST** | connector M23, (8 + 1-pole) |

| | |
|---|---|
| **ST2** | connector M12, 8-pole |
| **(2)** | |
| **1P2PW** | 1 Diagnostic output and 2 Safety outputs, p-type, combined diagnostic signal: guard door closed and interlocking device locked |
| **SD2P** | serial diagnostic output and 2 Safety outputs, p-type |
| **(3)** | |
| *without* | without Latching force |
| **RE** | electrically adjustable latching force 30 … 100 N |
| **(4)** | |
| **M** | Permanent magnet approx. 30 N |

**Actuator monitored**

**MZM 100 B (1)-(2)RE(3)-A**

| | |
|---|---|
| **(1)** | |
| **ST** | connector M23, (8 + 1-pole) |
| **ST2** | connector M12, 8-pole |
| **(2)** | |
| **1P2PW2** | 1 diagnostic output and 2 safety outputs, all p-type and combined diagnostic signal: safety guard closed and solenoid interlock locked. |
| **SD2P** | serial diagnostic output and 2 Safety outputs, p-type |
| **(3)** | |
| **M** | Permanent magnet approx. 30 N |

**Indication legend**

| | |
|---|---|
| **B** | Actuator monitored |
| **RE** | electrically adjustable latching force 30 … 100 N |
| **A** | Power to lock |

## Documents

**Operating instructions and Declaration of conformity** (pt) 349 kB, 27.01.2012
Code: mrl_mzm100_pt

**Operating instructions and Declaration of conformity** (fr) 316 kB, 03.06.2013
Code: mrl_mzm100_fr

**Operating instructions and Declaration of conformity** (de) 325 kB, 21.11.2012
Code: mrl_mzm100_de

**Operating instructions and Declaration of conformity** (en) 321 kB, 21.11.2012
Code: mrl_mzm100_en

**Operating instructions and Declaration of conformity** (nl) 322 kB, 14.01.2013
Code: mrl_mzm100_nl

**Operating instructions and Declaration of conformity** (it) 322 kB, 29.11.2012
Code: mrl_mzm100_it

**Operating instructions and Declaration of conformity** (jp) 610 kB, 14.01.2013
Code: mrl_mzm100_jp

**Operating instructions and Declaration of conformity** (it) 322 kB, 29.11.2012
Code: mrl_mzm100_it

**Operating instructions and Declaration of conformity** (pl) 354 kB, 02.12.2014

Code: mrl_mzm100_pl

**Operating instructions and Declaration of conformity** (es) 906 kB, 28.06.2011
Code: mrl_mzm100_es

**Operating instructions and Declaration of conformity** (cn) 446 kB, 27.05.2015
Code: mrl_mzm100_cn

**Wiring example** (de) 41 kB, 29.09.2009
Code: kmzm1p01

**Wiring example** (99) 19 kB, 22.01.2009
Code: kmzm1l03

**BG-test certificate** (de) 2 MB, 26.08.2014
Code: z_mzmp03

## Images

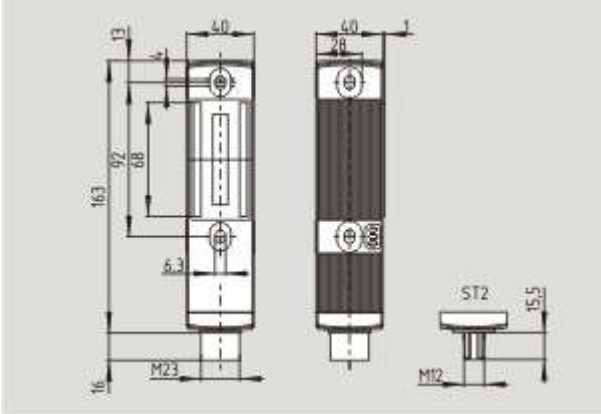

Dimensional drawing (basic component)

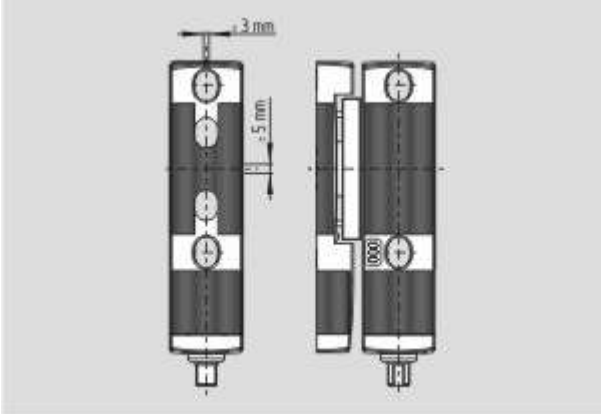

Dimensional drawing (miscellaneous)

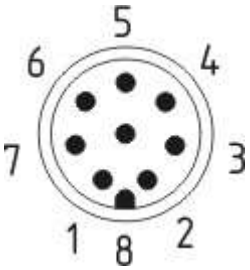

Contact arrangement

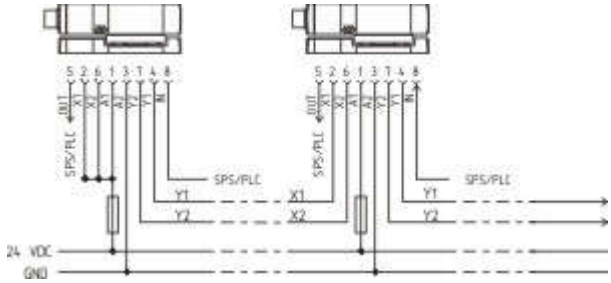

Wiring example

## System components

### Actuator



**101204290 - MZM 100-B1.1**

• actuator free from play
• i.e. neutralisation of undesired noises

### Accessories



**101210642 - MZM 100 TARGET**

• for the variable setting of the latching force
• gradually adjustable by steps of approx. 10 N within a range from approx. 30 N to 100 N



**101185510 - MS MZM 100-W**

### Connector




**A-K8M12**

• Pre-wired cable
• 8-pole