Ex position switch with safety function
Ex ES 97 D-11 -60°C
Material number: 1336746

Features/Options

- Ex zone 1 and 21
- Thermoplastic enclosure
- Cold-resistant down to -60 °C
- High degree of protection IP 66 / IP 67
- Design to EN 50047
- Wiring compartment
- Double insulated ⧈
- Actuator: Rocking lever D

Note

- 1 Ex"e" cable gland M20x1.5 included in delivery

Dimensions

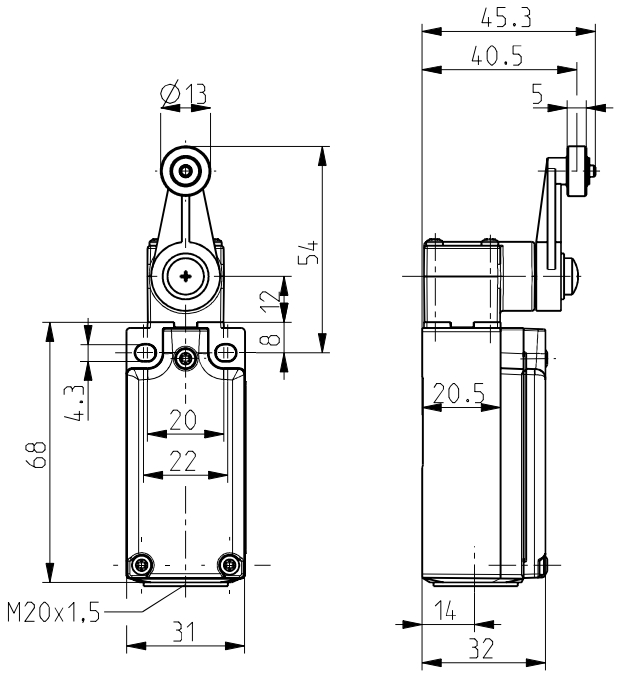

Technical data

Standards	EN 60947-5-1; EN 60079-0, EN 60079-1, EN 60079-7, EN 60079-31; EN ISO 13849-1; EN ISO 14119
Enclosure	glass-fibre reinforced, shock-proof thermoplastic, self-extinguishing UL 94-V0
Cover	glass-fibre reinforced, shock-proof thermoset material, self-extinguishing UL 94-V0
Switch type	type 1
Coding level	no coding
Switch insert	Type 8080/1-1
Degree of protection	IP 66 to IEC/EN 60529 (... -60 °C) IP 67 to IEC/EN 60529 (... -20 °C)
Contact material	Silver, nickel-plated
Switching system	slow action, positive break NC contacts ⊖
Switching elements	1 NC/1 NO contact, type Zb
Connection	screw connection terminals, min. 0,2 mm² AWG 24, max. 1,5 mm² AWG 16, incl. conductor ferrules
Cable entry	M20 x 1,5; screwing depth max. 9 mm; use only Ex approved and certified cable glands with min. degree of protection IP 66 and suitable for the specified ambient temperature range
B_{10d} (10 % Load)	2 million
T_M	max. 20 years
Utilisation category	AC-15
I_e	max. 2 A or 4 A ⧈
U_e	max. 500 VAC, max. 250 VAC for unequal potential
Mechanical life	> 1 million operations
Impact energy	max. 7 J
Temperature class	T6
Ambient temperature	-60 °C ... +55 °C max. 4 A, +60 °C max. 2 A
Max. fuse rating	6 A gG/gN fuse
Ex marking	⟨Ex⟩ II 2G Ex db eb IIC T6 Gb, ⟨Ex⟩ II 2D Ex tb IIIC T80 °C Db IECEx Ex db eb IIC T6 Gb, Ex tb IIIC T80 °C Db
Approvals	BVS 16 ATEX E 052 IECEx BVS 16.0052

steute Schaltgeräte GmbH & Co. KG | Brückenstraße 91, 32584 Löhne, Germany | Telefon +49 (0) 5731 745-0 | Telefax +49 (0) 5731 745-200 | info@steute.com | www.steute.com

Ex position switch with safety function
Ex ES 97 D-11 -60°C
Material number: 1336746

Errors and omissions excepted.

Contact diagram

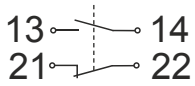

Switching diagram

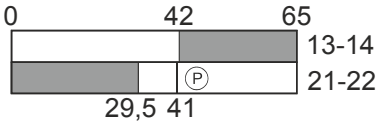

steute Schaltgeräte GmbH & Co. KG | Brückenstraße 91 32584 Löhne, Germany | Telefon +49 (0) 5731 745-0 Telefax +49 (0) 5731 745-200 | info@steute.com www.steute.com