Brand of NTN Group

Technical data

MUCFPL206

Bearing units



Thermoplastic housing, stainless steel insert ball bearing with socket set screws, seal with slinger, food grease

KIT CONTENT

MUC206FD, FPL206

VISUAL (S)

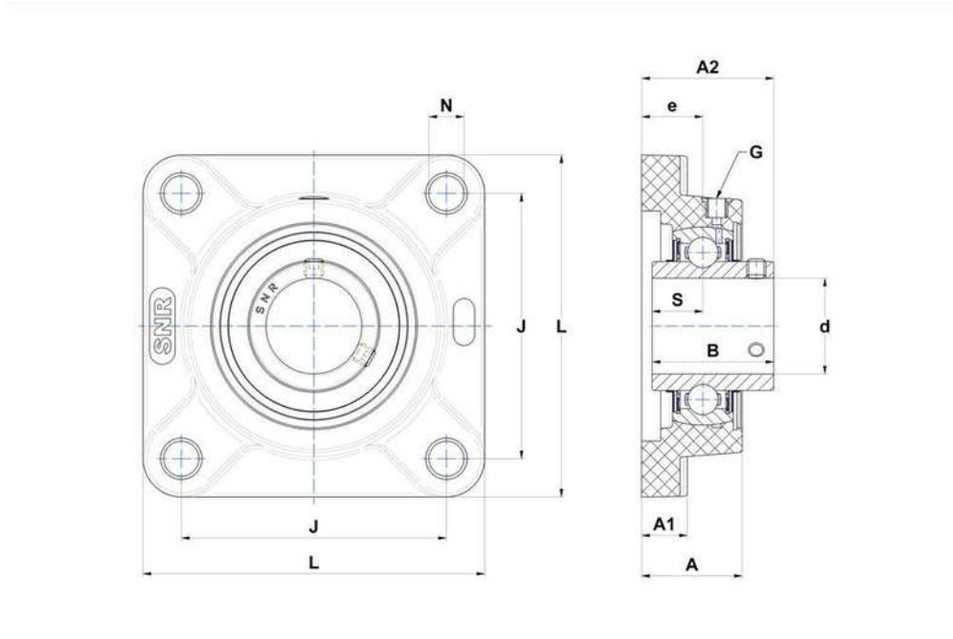

PRODUCT DEFINITION

Brand	SNR
A - Housing height	31,5 mm
A1 - Housing foot height / flange height	14,3 mm
A2 - Total height from mounting surface	41,4 mm
B - Width of Inner Ring	38,1 mm

MUCFPL206
Bearing units

PRODUCT DEFINITION	
d - Shaft diameter	30 mm
e - Distance mounting surface to bearing center	19,2 mm
G - Grease fitting	1/4"-28
J - Mounting holes distance	83 mm
L - Housing width / diameter	107 mm
N - Mounting hole dimension	11 mm
S - Distance front side/bearing centre	15,9 mm

PRODUCT PERFORMANCE	
C - Dynamic load rating	16700000 mN
C0 - Static load rating	9000000 mN
Operating temperature min.	253,15 °K
Operating temperature max.	373,15 °K

OTHER FEATURES	
Mass	0,5 kg
Recommended tightening torque for set screw	3.9 N-m