SUNON

SPECIFICATION FOR APPROVAL

CUSTOMER :

MOTOR TYPE

DESCRIPTION : **MagLev Motor Fan**

DIMENSIONS : **30X30X10 mm**

M O D E L : **HA30101V3-1000U-A99**

SUNON SPEC. NO. : **D03033640G-01**

CUSTOMER APPROVAL NO. :

APPROVED BY CUSTOMER :

(AUTHORIZED)

DRAWN	Nancy 07/19	**CHECKED**	Cindy	**APPROVED**	Smart	**SPEC.NO**	**D03033640G-01**
						ISSUE DATE	**07.19.2017**
						EDITION	**0**
						REVISION DATE	
						E.SPEC	**E11600150**

建準電機工業股份有限公司
SUNONWEALTH ELECTRIC MACHINE INDUSTRY CO., LTD.
NO. 30, LN. 296, XINYA RD., QIANZHEN DIST., KAOHSIUNG CITY 80673, TAIWAN (R.O.C)
URL:http://www.SUNON.com
TEL:886-7-8135888
FAX:886-7-8230505/8230606/8231010
E-mail: sunon@email.sunon.com.tw

建準電機工業(股)公司 D.C.C. 2017.09.05 發 行 章

I. MODEL NUMBERING SYSTEM

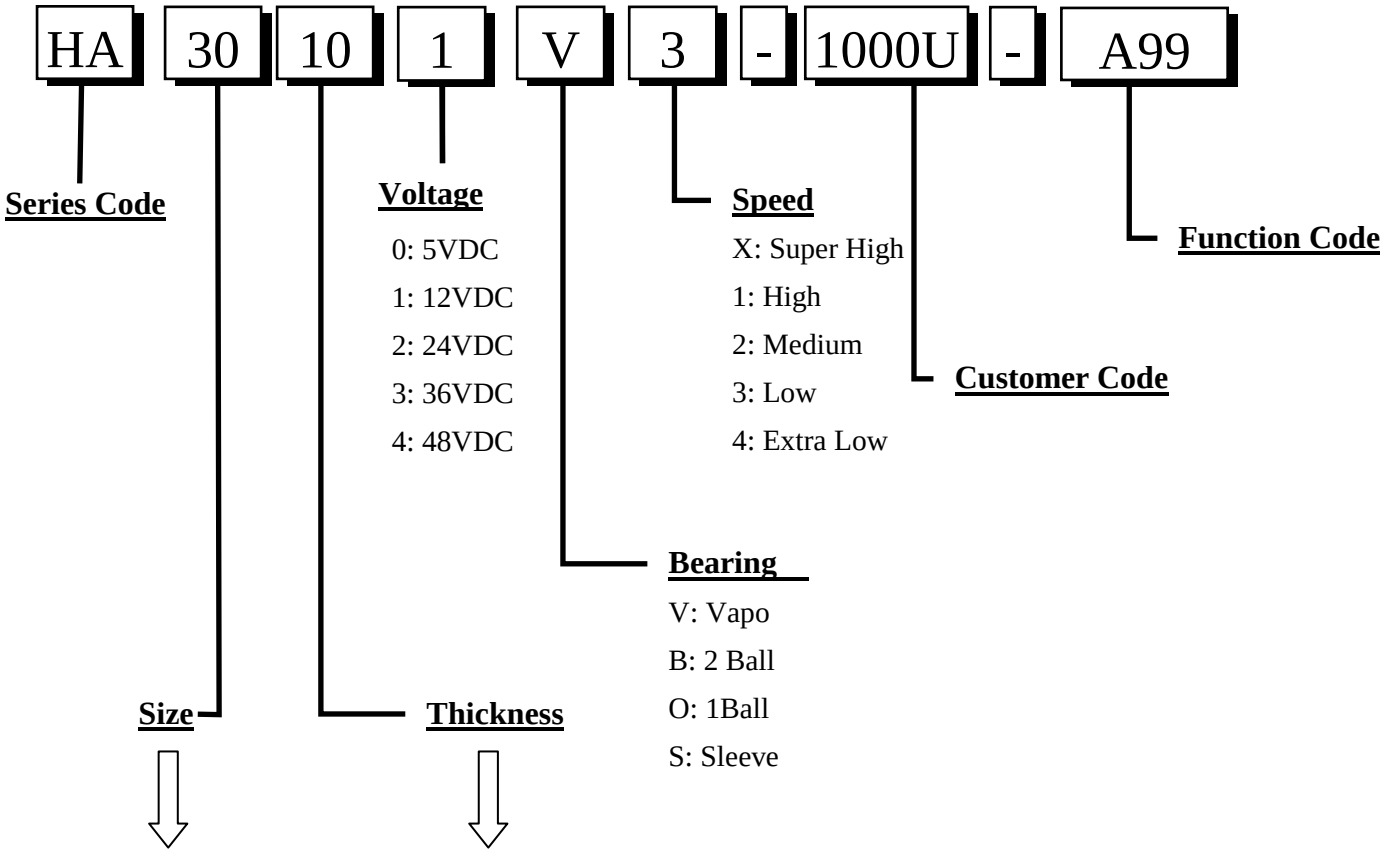

編碼	尺寸(mm)	編碼	尺寸(mm)	編碼	尺寸(mm)	編碼	尺寸(mm)
01~09	01~09	A0~A9	100~109	K0~K9	200~209	V0~V9	300~309
10~19	10~19	B0~B9	110~119	L0~L9	210~219	W0~W9	310~319
20~29	20~29	C0~C9	120~129	M0~M9	220~229	X0~X9	320~329
30~39	30~39	D0~D9	130~139	N0~N9	230~239	Y0~Y9	330~339
40~49	40~49	E0~E9	140~149	P0~P9	240~249	Z0~Z9	340~349
50~59	50~59	F0~F9	150~159	Q0~Q9	250~259		
60~69	60~69	G0~G9	160~169	R0~R9	260~269		
70~79	70~79	H0~H9	170~179	S0~S9	270~279		
80~89	80~89	I0~I9	180~189	T0~T9	280~289		
90~99	90~99	J0~J9	190~199	U0~U9	290~299		

建準電機工業(股)公司
D.C.C.
2017.09.05
發 行 章

II. SPECIFICATION

1. MECHANICAL CHARACTERISTIC

MOTOR DESIGN	**Single phase, 4-poles Brushless DC motor**
BEARING SYSTEM	**Precise Vapo bearing system**
DIMENSIONS	**See Page 6**
MATERIALS OF FRAME	**Thermoplastic PBT of UL 94V-0**
MATERIALS OF FAN BLADE	**Thermoplastic PBT of UL 94V-0**
DIRECTION OF ROTATION	**Counter-clockwise viewed from front of fan blade**
MOUNTING HOLES	**Diameter 3.2 mm in 3 holes**
WEIGHT	**7.8 g**

2. ELECTRIC CHARACTERISTIC

RATED VOLTAGE	**12 VDC**
RATED CURRENT	**25 mA / Max. 30 mA**
RATED POWER CONSUMPTION	**0.30 WATTS / Max. 0.36 WATTS**
SAFETY POWER CONSUMPTION	**0.56 WATTS**
OPERATING VOLTAGE RANGE	**6~13.8 VDC**
STARTING VOLTAGE	**6 VDC (25 deg. C POWER ON/OFF)**
OPERATING TEMPERATURE RANGE	**-10 to + 70 deg. C**
STORAGE TEMPERATURE RANGE	**-40 to + 70 deg. C**

建準電機工業(股)公司 D.C.C. 2017.09.05 發 行 章

3. PERFORMANCE CHARACTERISTIC

RATED SPEED	**7000 RPM ± 20% at rated voltage**
AIR FLOW	**3.5 CFM**
STATIC PRESSURE	**0.10 Inch-H_2O**
ACOUSTIC NOISE	**15.1 dB(A)**
AIR FLOW V.S. PRESSURE	**See Page 5**
INSULATION CLASS	**UL Class A**
INSULATION RESISTANCE **PLASTIC HOUSING**	**10M ohm at 500 VDC between internal stator and Lead wire (+)**
DIELECTRIC STRENGTH	**Applied AC 500 V for one minute or AC 600 V for 2 Seconds between housing and lead wire (+)**
LIFE EXPECTANCY	**70,000 Hours at 40 deg. C, 65% humidity, 90% CL.**
PROTECTION	**☑Automatic Restart** Note: In a situation where the fan is locked by an external force while the electricity is on, an increase in coil temperature will be prevented by temporarily turning off the electrical power to the motor. The fan will automatically restart when the locked rotor condition is released.
	☑Polarity Protection

4. SAFETY

SAFETY	UL	CUR	TUV	CE
NO.	E77551	E77551	✓	✓

建準電機工業(股)公司 D.C.C. 2017.09.05 發 行 章

MODEL : HA30101V3-1000U-A99

PERFORMANCE CURVES

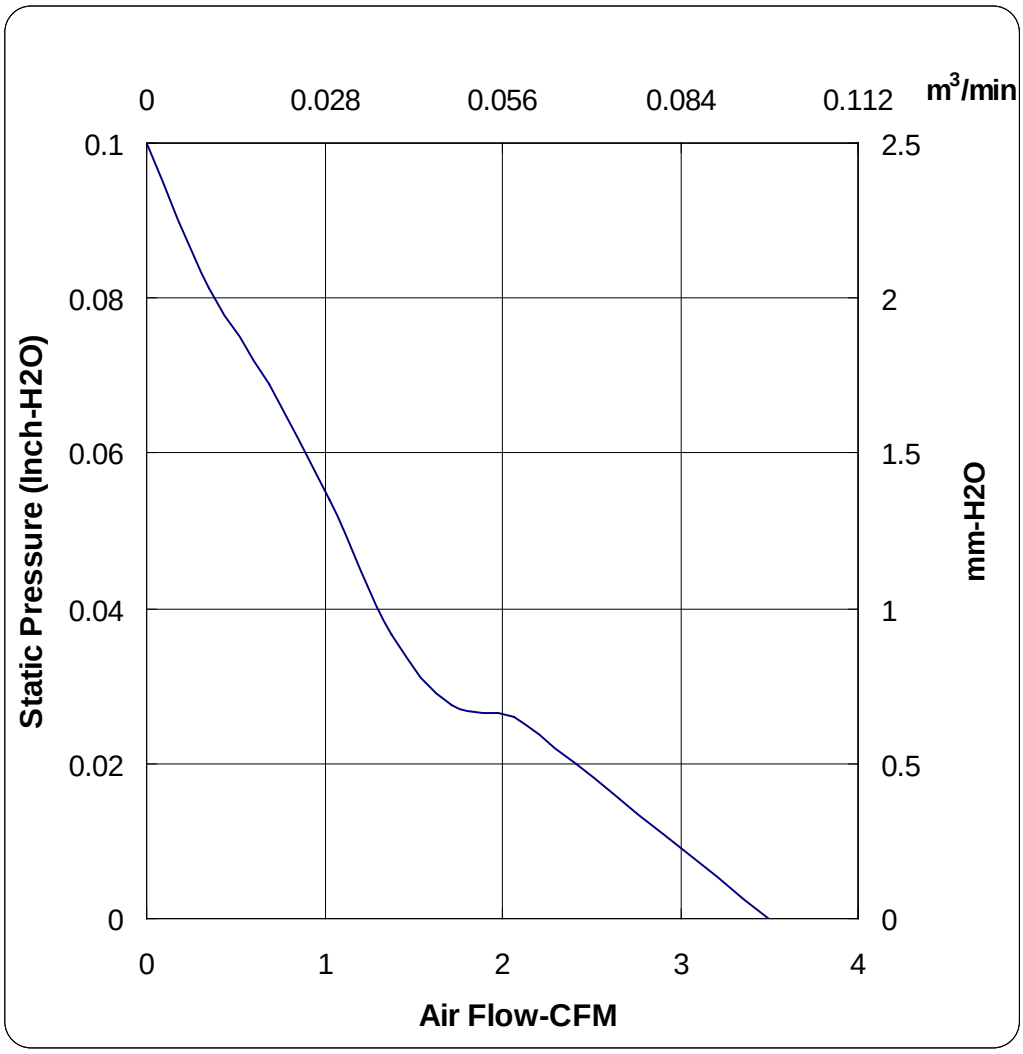

建準電機工業(股)公司
D.C.C.
2017.09.05
發 行 章

DIMENSIONS

Screw Type (Pan head)	Torque	Screw Spec	
		Size	Standard
Machine screw	1～2 Kgf-cm	M2.5	JIS B1111-1974

Note: SUNON recommends the screw and torque as above. Please contact SUNON, if any new requirement is requested.

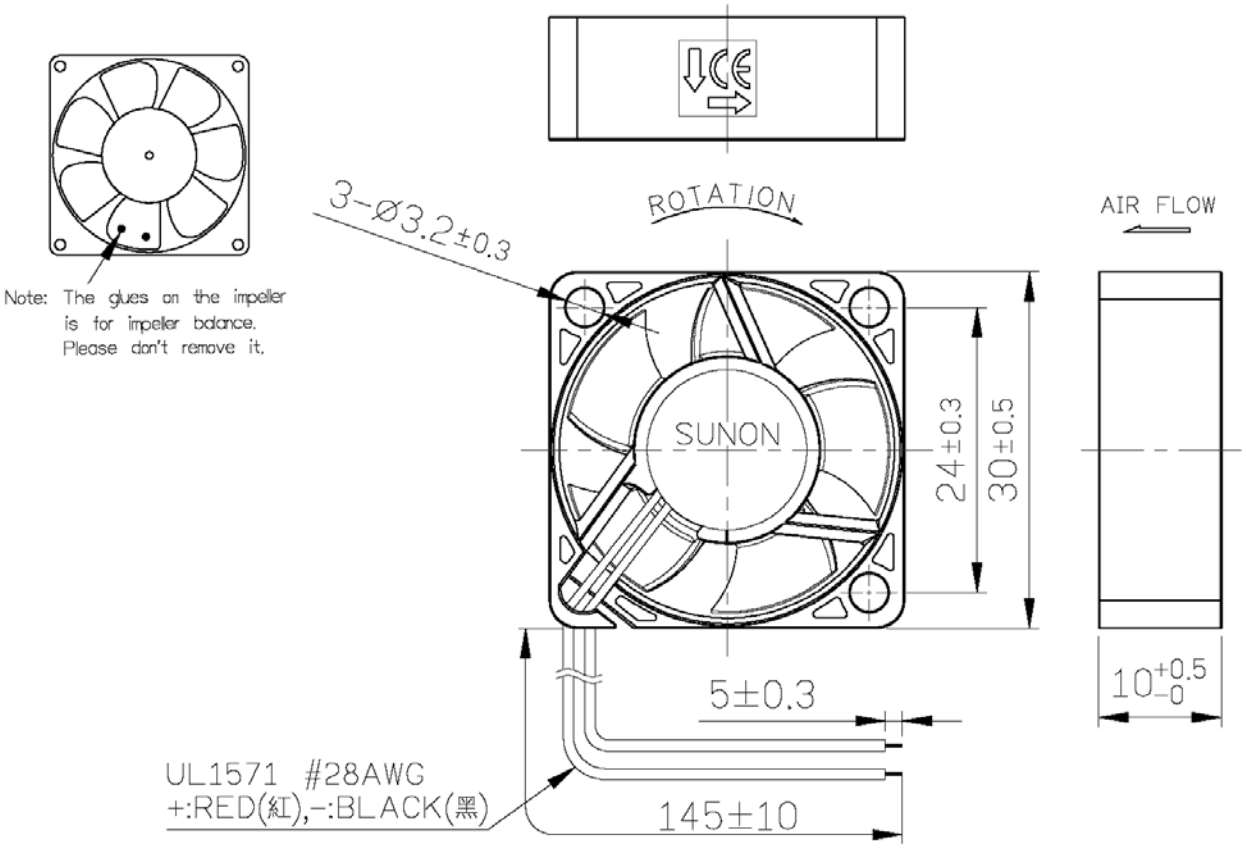

UNIT：mm

建準電機工業(股)公司
D.C.C.
2017.09.05
發 行 章

LABEL

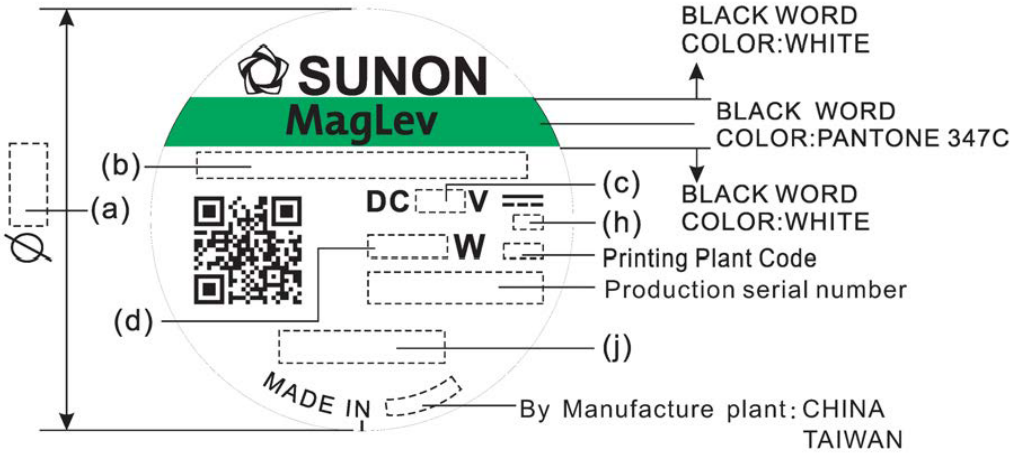

(a)Dimension	(b)Model Name	(c)Voltage	(d)Power Consumption	(h)Protection
13.5	HA30101V3-1000U-A99	12	0.56	EP

(j)Safety
TUV/UL+CUR

1.English font type: Swis721 Series & Switzerland Narrow, Chinese font type: 超研澤中明簡體.

2.Safety(TUV/UL+CUR)

建準電機工業(股)公司
D.C.C.
2017.09.05
發 行 章

III. OTHER SPECIFIED TESTING

The following is a general description of certain tests that are performed on representative SUNON fans. Nothing in this document is intended to suggest that these tests are performed on every model of SUNON fan. Moreover, the descriptions that follow each test are meant only to provide a general explanation of each test. If you would like a more detailed explanation as to any test identified in this Section, SUNON can provide such an explanation upon request.

1. DROP PROOF TEST

Fans are packaged in a standard size shipping box and are dropped to the ground from certain heights and angles depending on the weight of the particular box.

2. HUMIDITY PROOF TEST

The fan is operated for 96 continuous hours in an environment with humidity of 90% to 95% RH at 60°C ± 2°C.

3. VIBRATION PROOF TEST

Vibration with an amplitude 2mm and a frequency of 5-55-5hz is applied in all 3 directions (X,Y,Z), in cycles of 1 hour each, for a total vibration time of 3hours.

4. THERMAL CYCLING TEST

The fan is operated in a testing chamber for 50 cycles. In each cycle, the temperature is gradually increased from -10°C to 70°C for 90 minutes, and subsequently operated at 70°C for 120 minutes. The temperature is then gradually decreased from 70°C to -10°C for 90 minutes, and subsequently operated at -10°C for 120 minutes.

5. SHOCK PROOF TEST

100G of force is applied in the 3 directions (X,Y, and Z) for 2 milliseconds each.

6. LIFE EXPECTANCY

The “Life Expectancy” of SUNON fans is determined in SUNON’s reliability test laboratory by using temperature chambers. The “Life Expectancy” of this fan has not been evaluated for use in combination with any end application. Therefore, the Life Expectancy Test Reports (L10 and MTTF Report) that relate to this fan are only for reference.

建準電機工業(股)公司 D.C.C. 2017.09.05 發 行 章

IV. CHARACTERISTIC DEFINITION

The following is a general description of certain tests that are performed on representative SUNON fans in order to determine the specifications of the fan**.** Nothing in this document is intended to suggest that these tests are performed on every model of SUNON fan. Moreover, the descriptions that follow each test are meant only to provide a general explanation of each test. If you would like a more detailed explanation as to any test identified in this Section, SUNON can provide such an explanation upon request.

1. ACOUSTICAL NOISE

Measured in a semi-anechoic chamber with background noise level below 15dB(A).

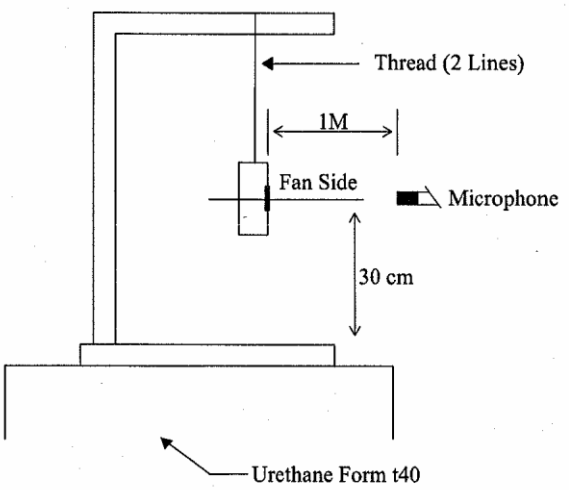

1 METER FROM MICROPHONE TO FAN INTAKE

The fan is running in free air under shaft horizontal condition with the microphone at distance of one meter from the fan intake.

2. INPUT POWER

Measured after continuous 10 minute operation at rated voltage in clean air (STATIC PRESSURE=0), and at ambient temperature of 25 degrees C under shaft horizontal condition.

3. RATED CURRENT

Measured after continuous 10 minute operation at rated voltage in clean air (STATIC PRESSURE=0), and at ambient temperature of 25 degrees C under shaft horizontal condition.

建準電機工業(股)公司 D.C.C. 2017.09.05 發 行 章

4. RATED SPEED

Measured after continuous 10 minute operation at rated voltage in clean air (STATIC PRESSURE=0), and at ambient temperature of 25 degrees C under shaft horizontal condition.

5. STARTING VOLTAGE

Measured the voltage which enables to start the fan in the clean air (static pressure = 0) by switching on at the voltage under shaft horizontal condition. It is not at continuously increasing voltage adjustment.

6. LOCKED ROTOR CURRENT

Measured immediately after the fan blade is locked.

7. AIR FLOW AND STATIC PRESSURE

The performance specification of air flow and static pressure shown in this specification for approval is measured using the exhaust method. A double chamber is used in accordance with AMCA 210 standard or DIN 24163 specification . The values are recorded when the fan speed has stabilized at rated voltage.

8. INSULATION RESISTANCE

1. PLASTIC HOUSING:
   (1) Measured between internal stator and lead wire(+).
   (2) Measured between housing and lead wire(+).

2. ALUMINIUM HOUSING:
   Measured between internal stator and lead wire(+).

9. DIELECTRIC STRENGTH

Measure between housing and lead wire(+).

建準電機工業(股)公司 D.C.C. 2017.09.05 發 行 章

V. NOTE

Ⅰ.SAFETY

1. DO NOT use or operate this fan in excess of the limitations set forth in this specification. SUNON is not responsible for the non-performance of this fan and/or any damages resulting from its use, if it is not used or operated in accordance with the specifications.

2. SUNON recommends adding a protection circuit to the product or application in which this fan is installed, such as a thermo-fuse, or current-fuse or thermo-protector. The failure to use such a device may result in smoke, fire, electric shock by insulation degradation in cases of motor lead short circuit, overload, or over voltage, and/or other failure.

3. SUNON recommends installing a protection device to the product or application in which this fan is installed if there is a possibility of reverse-connection between VDC (+) and GND (-). The failure to install such a device may result in smoke, fire, and/or destruction, although these conditions may not manifest immediately.

4. This fan must be installed and used in compliance with all applicable safety standards and regulations.

5. Use proper care when handling and/or installing this fan. Improper handling or installation of this fan may cause damage that could result in unsafe conditions.

6. Use proper care during installation and/or wiring. Failure to use proper care may cause damage to certain components of the fan including, but not limited to, the coil and lead wires, which could result in smoke and/or fire.

7. DO NOT use power or ground PWM to control the fan speed. If the fan speed needs to be adjusted, please contact SUNON to customize the product design for your application.

8. For critical or extreme environments, including non stop operation, please contact SUNON and we will gladly provide assistance with your product selection to ensure an appropriate cooling product for your application.

建準電機工業(股)公司 D.C.C. 2017.09.05 發行章

II. SPECIFICATION MODIFICATION

1. SUNON offers engineering assistance on fan installation and cooling system design.

2. All changes, modifications and/or revisions to the specifications, if any, are incorporated in the attached specifications.

3. No changes, modifications and/or revisions to these specifications are effective absent agreement, by both SUNON and the customer, in writing.

4. This fan will be shipped in accordance with the attached specification unless SUNON and the customer have agreed otherwise, in writing, as specified in Paragraph 3, above.

III. OTHER

1. When building your device, please examine thoroughly any variation of EMC, temperature rise, life data, quality, etc. of this product by shock/drop/vibration testing, etc. If there are any problems or accidents in connection with this product, it should be mutually discussed and examined.

2. Use proper care when handling this fan. Components such as fan holders or bearings may be damaged, if touched with fingers or other objects. Additionally, static electricity (ESD) may damage the internal circuits of the fan.

3. DO NOT operate this fan in proximity to hazardous materials such as organic silicon, cyanogens, formalin, phenol, or corrosive gas environments including, but not limited to, H_2S, SO_2, NO_2, or Cl_2.

4. SUNON recommends that you protect this fan from exposure to outside elements such as dust, condensation, humidity or insects. Exposure of this fan to outside elements such as dust, condensation, humidity or insects may affect its performance and may cause safety hazards. SUNON does not warrant against damage to the product caused by outside elements.

5. This fan must be installed properly and securely. Improper mounting may cause harsh resonance, vibration, and noise.

建準電機工業(股)公司 D.C.C. 2017.09.05 發行章

6. Fan guards may prevent injury during handling or installation of the fan and are available for sale with this fan.

7. Unless otherwise noted, all testing of this fan is conducted at 25°C ambient temperature and sixty-five percent (65%) relative humidity.

8. DO NOT store this fan in an environment with high humidity. This fan must be stored in accordance with the attached specifications regarding storage temperature. If this fan is stored for more than 6 months, SUNON recommends functional testing before using.

9. SUNON reserves the right to use components from multiple sources at its discretion. The use of components from other sources will not affect the specifications as described herein.

10. The “Life Expectancy” of this fan has not been evaluated for use in combination with any end application. Therefore, the Life Expectancy Test Reports (L10 and MTTF Report) that relate to this fan are only for reference.

VI. WARRANTY

This fan is warranted against all defects which are proved to be fault in our workmanship and material for one year from the date of our delivery. The sole responsibility under the warranty shall be limited to the repair of the fan or the replacement thereof, at SUNON’s sole discretion. SUNON will not be responsible for the failures of its fans due to improper handing, misuse or the failure to follow specifications or instructions for use. In the event of warranty claim, the customer shall immediately notify SUNON for verification. SUNON will not be responsible for any consequential damage to the customer’s equipment as a result of any fans proven to be defective.

建準電機工業(股)公司 D.C.C. 2017.09.05 發行章

Declaration of RoHS

Control declaration of environment-related substances/materials

1. **In accordance with the Restriction of Hazardous Substances (RoHS) Directive 2011/65/EU, SUNON product have complied with law and discipline not to employ the forbidden substances, and restrict the allowable concentration of some limited substances deliberately in our components.**

No	Substance		Criteria
1	CFCs & HCFCs (ozone depleting substances)		Forbidden
2	Chlorinated Organic Solvent		Forbidden
3	Lead and its compounds	Plastic (Frame, Impeller, wire harness, etc.)	<100ppm
		Solder	<1000ppm
		Steel alloy	<3500ppm
		Aluminium alloy	<4000ppm
		Copper alloy	<4wt%
4	Cadmium and its compounds	Solder	<20ppm
		Parts composed of metals containing zinc (e.g. brass, zinc for die casting)	<100ppm
		Plastic	<5ppm
5	PBBs and PBDEs		Forbidden
6	PCB and PCT		Forbidden
7	CP, Short-chain Chlorinated paraffins C10-13, Cl ≥48 wt%		Forbidden
8	Mirex		Forbidden
9	PCN		Forbidden
10	Hexavalent Chromium compounds		<100ppm
11	Mercury and its compounds		Forbidden
12	Asbestos		Forbidden
13	Organic Tin compounds		Forbidden
14	Azo compounds		Forbidden
15	TBBP-A in external case plastic parts of products (PCB is exempted)		<1000ppm
16	Nickel in external case parts, which are likely to result in prolonged skin exposure		<1000ppm
17	Hexabromocyclododecane (HBCDD)		<1000ppm
18	Di-butyl Phthalate (DBP)		<1000ppm
19	Benzyl butyl Phthalate (BBP)		<1000ppm
20	Di-ethylhexyl Phthalate (DEHP)		<1000ppm
21	Di-isobutyl Phthalate (DIBP)		<1000ppm

建準電機工業(股)公司 D.C.C. 2017.09.05 發 行 章