PN7093
PN-025-RER14-QFRKG/US/ /V

Pressure sensors

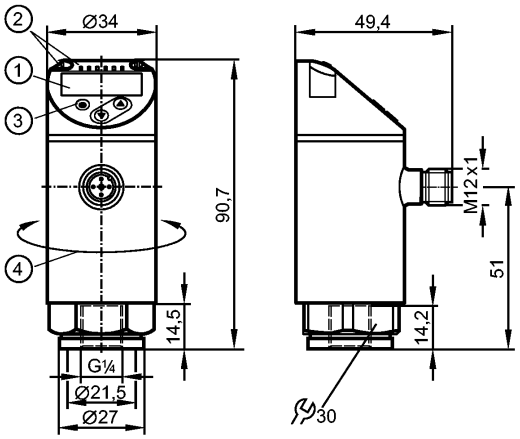

1: 4-digit alphanumeric display / alternating indication of red and green
2: LEDs (display unit / switching status)
3: Programming button
4: Upper part of the housing can be rotated by 345°

Product characteristics

Electronic pressure monitor
M12 connector
Function programmable
Measuring element: ceramic-capacitive pressure measuring cell
Process connection: G ¼ I
2 outputs OUT1 = switching output OUT2 = switching output
4-digit alphanumeric display / alternating indication of red and green
Measuring range: 0...25 bar / 0...363 psi / 0...2.5 MPa

Application

Application		Type of pressure: relative pressure Group 2 fluids according to the Pressure Equipment Directive (PED), group 1 fluids on request For gas applications > 25 bar: select PN7x7x series		
Pressure rating		150 bar	2175 psi	15 MPa
Bursting pressure min.		350 bar	5075 psi	35 MPa
Medium temperature	[°C]	-25...80		

Electrical data

Electrical design		DC PNP/NPN
Operating voltage	[V]	18...30 DC [1])
Current consumption	[mA]	< 35
Insulation resistance	[MΩ]	> 100 (500 V DC)
Protection class		III
Reverse polarity protection		yes

Outputs

Output		2 outputs OUT1 = switching output OUT2 = switching output
Output function		2 x normally open / closed programmable
Current rating	[mA]	150; 200 (...60 °C); 250 (...40 °C)
Voltage drop	[V]	< 2.5
Short-circuit protection		pulsed
Overload protection		yes

PN7093 - Electronic pressure monitor - eclass: 27201302 / 27-20-13-02

Switching frequency	[Hz]	≤ 170		
Measuring / setting range				
Measuring range		0...25 bar	0...363 psi	0...2.5 MPa
Setting range				
Set point, SP		0.2...25 bar	4...362 psi	0.02...2.5 MPa
Reset point, rP		0.1...24.9 bar	2...360 psi	0.01...2.49 MPa
in steps of		0.1 bar	2 psi	0.01 MPa
Accuracy / deviations				
Accuracy / deviations (in % of the span)				
Switch point accuracy		< ± 0.5		
Characteristics deviation *)		< ± 0.25 (BFSL) / < ± 0.5 (LS)		
Hysteresis		< ± 0.25		
Repeatability **)		< ± 0.1		
Long-term stability ***)		< ± 0.05		
Temperature coefficients (TEMPCO) in the temperature range -25...80° C (in % of the span per 10 K)				
Greatest TEMPCO of the zero point		0.2		
Greatest TEMPCO of the span		0.2		
Reaction times				
Power-on delay time	[s]	< 0.3		
Min. response time switching output	[ms]	< 3		
Delay time programmable dS, dr	[s]	0...50		
Integrated watchdog		yes		
Software / programming				
Programming options		hysteresis / window function; NO / NC; output polarity; on delay, off delay; damping; display unit		
Interfaces				
IO-Link device				
Transfer type		COM2 (38.4 kBaud)		
IO-Link revision		1.1		
SDCI standard		IEC 61131-9		
IO-Link device ID		402 d / 00 01 92 h		
Profiles		Smart Sensor: Process Data Variable; Device Identification, Device Diagnosis		
SIO mode		yes		
Required master port class		A		
Process data analogue		1		
Process data binary		2		
Min. process cycle time	[ms]	2.3		
Environment				
Ambient temperature	[°C]	-25...80		
Storage temperature	[°C]	-40...100		
Protection		IP 65 / IP 67		
Tests / approvals				
Pressure equipment directive		Sound engineering practice		
EMC		DIN EN 61000-6-2 DIN EN 61000-6-3		
Shock resistance		DIN EN 60068-2-27	50 g (11 ms)	
Vibration resistance		DIN EN 60068-2-6	20 g (10...2000 Hz)	
MTTF	[Years]	224.01		
UL approval number		J001		
Mechanical data				
Process connection		G ¼ I		
Materials (wetted parts)		1.4404; ceramics; FKM		
Housing materials		1.4404; PBT+PC-GF 30; PBT-GF 20; PC		
Switching cycles min.		100 million		
Tightening torque	[Nm]	25...35 (recommended tightening torque²)		
Weight	[kg]	0.234		

PN7093 - Electronic pressure monitor - eclass: 27201302 / 27-20-13-02

Displays / operating elements

Display	Display unit 3 x LED green (bar, psi, MPa) Switching status 2 x LED yellow 4-digit alphanumeric display / alternating indication Measured values of red and green

Electrical connection

Connection	M12 connector; Gold-plated contacts

Wiring

Core colours

BK black
BN brown
BU blue
WH white



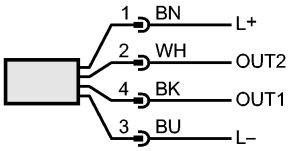

OUT1: switching output or IO-Link
OUT2: switching output
Colours to DIN EN 60947-5-2

Remarks

Remarks	[1]) to EN50178, SELV, PELV *) BFSL = Best Fit Straight Line / LS = Limit Value Setting **) with temperature fluctuations < 10 K ***) in% of the span / 6 months [2]) Depends on lubrication, seal and pressure rating
Pack quantity [piece]	1