Filter, Series AS5-FLS

R412009009

2024-03-20

Series AS5

The AVENTICS Series AS5 is a modular, versatile maintenance unit for universal application. This Series offers compact dimensions, is highly efficient, lightweight and easy-to-use. The AVENTICS Series AS guarantees reliability, safety, and efficiency with a simplified assembly and maintenance efforts.



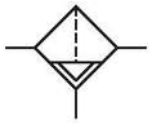

Technical data

Industry	Industrial
Parts	Filter
Reservoir	reservoir, polycarbonate, with PA protective guard
Port	G 1
Filter porosity	5 µm
Nominal flow Qn	7800 l/min
Condensate drain	semi-automatic, open without pressure
Min. working pressure	1.5 bar
Max. working pressure	16 bar
Min. ambient temperature	-10 °C
Max. ambient temperature	50 °C
Medium	Compressed air Neutral gases
Max. achievable compressed air class acc. to ISO 8573-1:2010	6 : 7 : -
Filter reservoir volume	87 cm³
Filter element	exchangeable
Weight	0.718 kg
Mounting orientation	vertical

Filter, Series AS5-FLS

2024-03-20

R412009009

Type	Can be assembled into blocks

Material

Housing material	Polyamide
Material front plate	Acrylonitrile butadiene styrene
Seal material	Acrylonitrile butadiene rubber
Material threaded bushing	Die cast zinc
Material reservoir	Polycarbonate
Material protective guard	Polyamide
Material filter insert	Polyethylene
Part No.	R412009009

Technical information

The pressure dew point must be at least 15 °C less than ambient and medium temperature and may not exceed 3 °C.

Note: Polycarbonate reservoirs are susceptible to solvents, supplementary information can be found at "Customer information".

A change in the flow direction (from air supply on the left to air supply on the right) occurs by rotating installation by 180° about the vertical axis. Please see the operating instructions for further details.

Also suitable for separation of fluid oil or water due to the design.

Filter, Series AS5-FLS

R412009009

2024-03-20

Dimensions

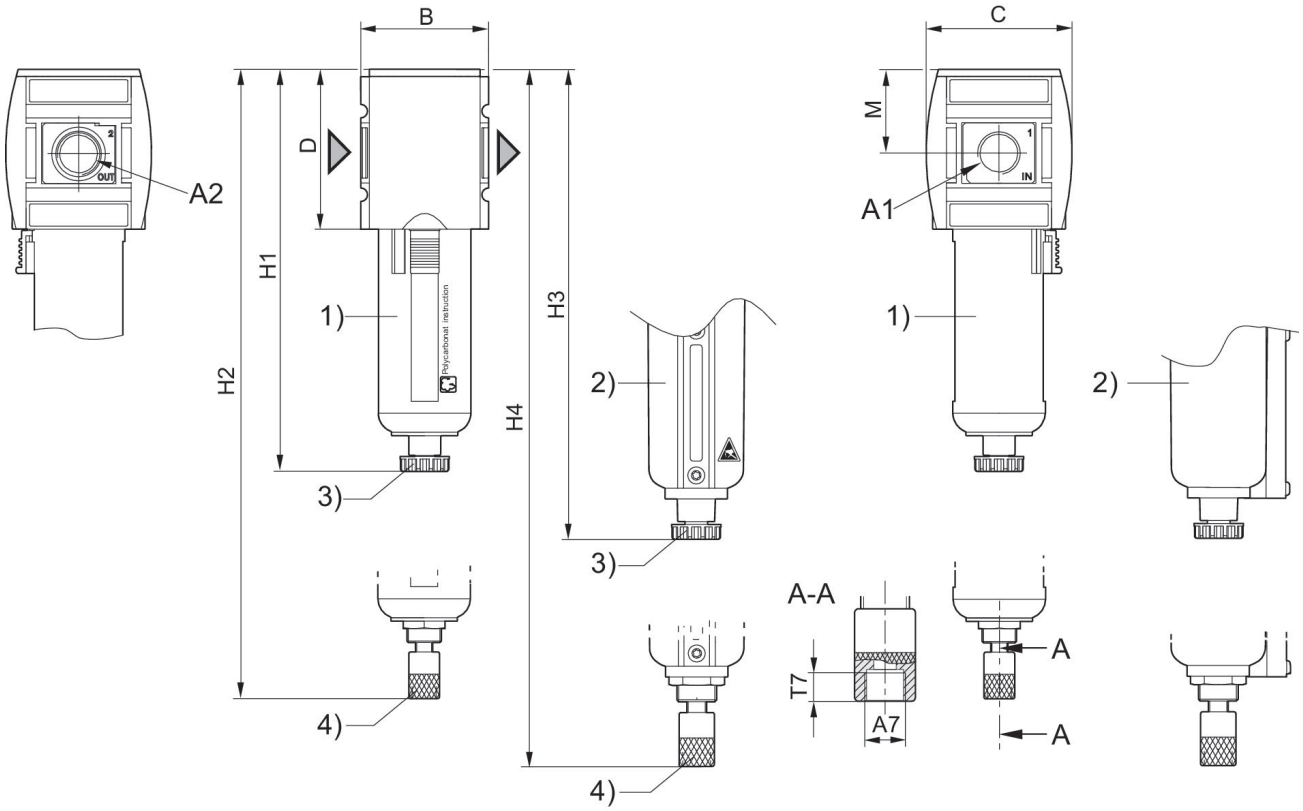

A1 = input A2 = output
A7 = condensate drain
1) Plastic reservoir and protective guard with window
2) Metal reservoir with level indicator
3) Semi-automatic condensate drain
4) Fully automatic condensate drain

Dimensions in mm

Part No.	A1	A2	A7	B	C	D	H1	H2	H3
R412009000	G 3/4	G 3/4	G 1/8	85	103	109	250	266	254
R412009001	G 3/4	G 3/4	G 1/8	85	103	109	250	266	254
R412009002	G 3/4	G 3/4	G 1/8	85	103	109	250	266	254
R412009006	G 3/4	G 3/4	G 1/8	85	103	109	250	266	254
R412009007	G 3/4	G 3/4	G 1/8	85	103	109	250	266	254
R412009008	G 3/4	G 3/4	G 1/8	85	103	109	250	266	254
R412009009	G 1	G 1	G 1/8	85	103	109	250	266	254
R412009010	G 1	G 1	G 1/8	85	103	109	250	266	254
R412009011	G 1	G 1	G 1/8	85	103	109	250	266	254
R412009015	G 1	G 1	G 1/8	85	103	109	250	266	254
R412009016	G 1	G 1	G 1/8	85	103	109	250	266	254
R412009017	G 1	G 1	G 1/8	85	103	109	250	266	254

Part No.	H4	M	T7
R412009000	270.5	58	8.5

Part No.	H4	M	T7
R412009001	270.5	58	8.5
R412009002	270.5	58	8.5
R412009006	270.5	58	8.5
R412009007	270.5	58	8.5
R412009008	270.5	58	8.5
R412009009	270.5	58	8.5
R412009010	270.5	58	8.5
R412009011	270.5	58	8.5
R412009015	270.5	58	8.5
R412009016	270.5	58	8.5
R412009017	270.5	58	8.5

Flow rate characteristic, p2 = 0,05 - 7 bar

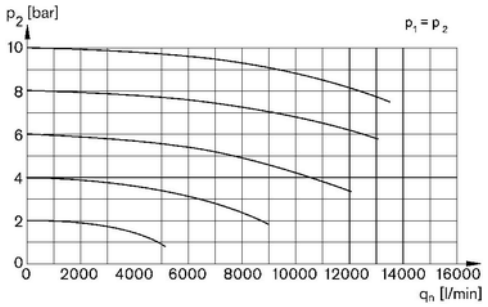

p1 = Working pressure p2 = Secondary pressure qn = Nominal flow

Filter, Series AS5-FLS

2024-03-20

R412009009

Accessories overview

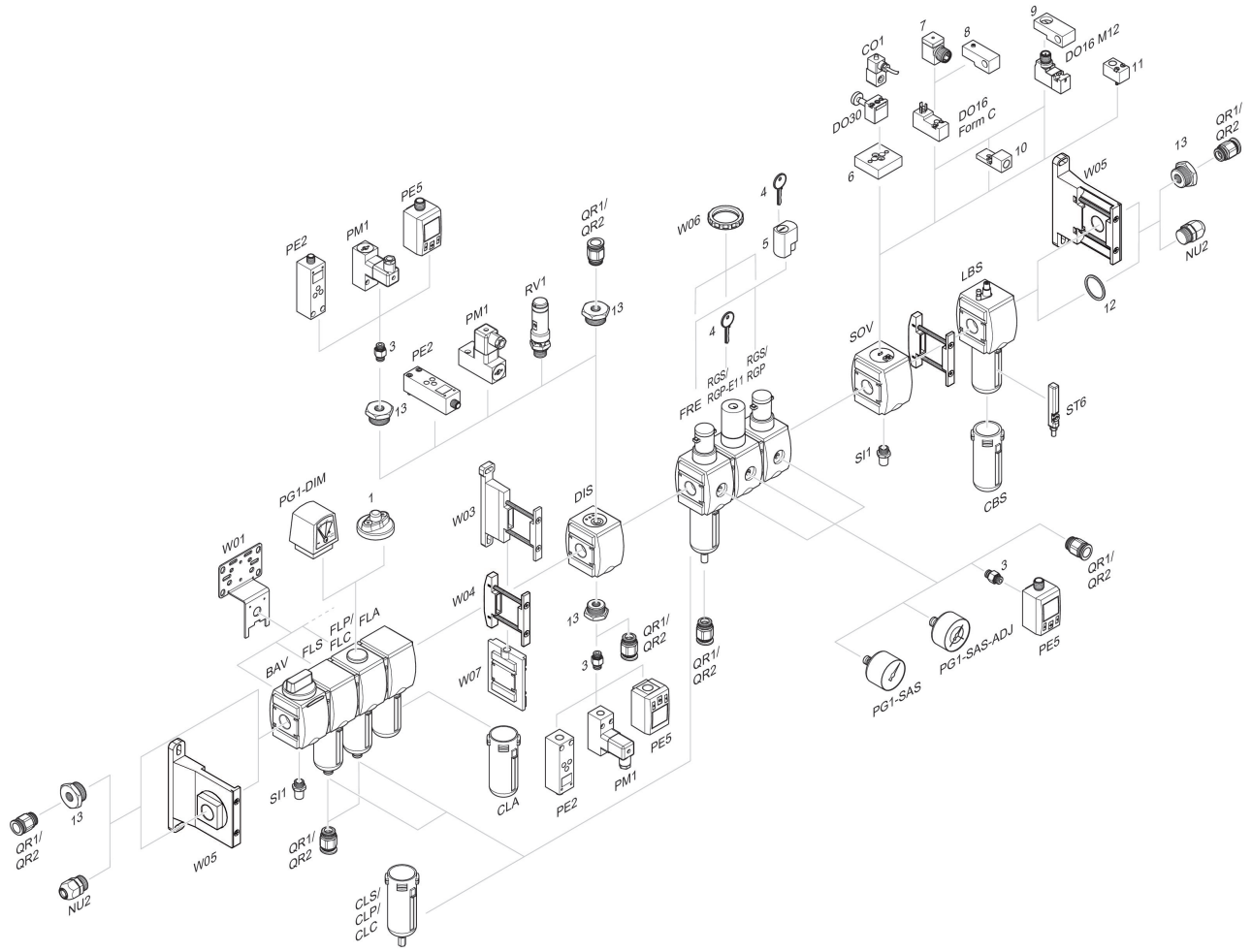

1 = contamination display 3 = Double nipple 4 = Key for E11 locking 5 = mortise lock 6 = Transition plate DO30 7 = Adapter, Series CON-VP 8 = Mounting aid DO16, form C 9 = Mounting aid DO16, M12 10 = Adapter for external pilot air 11 = Adapter pneumatic operation 12 = Sealing ring 13 = Reducing nipple