Max. 360 m³/h

DC axial fans

Ø 150 x 55 mm



- **Material:** Housing: Die-cast aluminum
  Impeller: GRP[1] (PA)
- **Direction of air flow:** Exhaust over struts
- **Direction of rotation:** Counterclockwise, looking towards rotor
- **Connection:** Via single wires AWG 22, TR 64
- **Highlights:** Housing with grounding lug for screw M4 x 8 (Torx)
- **Weight:** 725 g

- **Possible special versions:**
  (See chapter DC fans - specials)
  - Speed signal
  - Go / NoGo alarm
  - Alarm with speed limit
  - External temperature sensor
  - Internal temperature sensor
  - PWM control input
  - Analog control input
  - Moisture protection
  - Salt spray protection
  - Degree of protection: IP 54 / IP 68

1) Fiberglass-reinforced plastic

Series 7200 N

Nominal data

Type	Air flow m³/h	Air flow cfm	**Nominal voltage VDC**	Voltage range VDC	Sound pressure level dB(A)	Sound power level Bel(A)	Sintec sleeve bearings □ / Ball bearings ■	Power consumption* Watts	Nominal speed rpm⁻¹	Temperature range °C	Service life L_{10} (40 °C) ebm-papst standard / Service life L_{10} (T_{max}) ebm-papst standard Hours	Life expectancy L_{10IPC} (40 °C) see page 17 Hours	Curve
7212 N	360	212	**12**	6...15	53	6.2	■	12.0	3 050	-25...+72	80 000 / 37 500	135 000	①
7214 N	360	212	**24**	12...30	53	6.2	■	12.0	3 050	-25...+72	80 000 / 37 500	135 000	①
7218 N	360	212	**48**	24...60	53	6.2	■	12.0	3 050	-25...+72	80 000 / 37 500	135 000	①

Subject to change

* Power consumption at free air flow. These values can be significantly higher in the operating point.

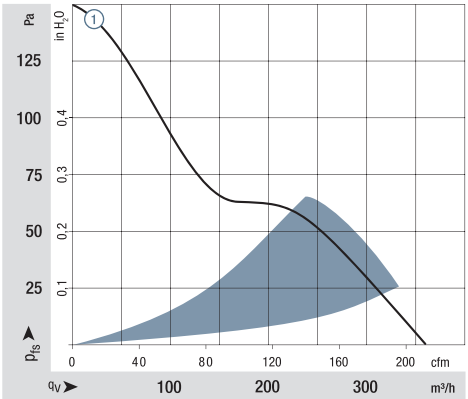

Air performance measured according to: ISO 5801.
Installation category A, without contact protection.
Noise: Total sound power level L_{WA} ISO 103002 measured on a hemisphere with a radius of 2 m.
Sound pressure level L_{pA} measured at 1 m distance from fan axis.
The values given are applicable only under the specified measuring conditions and may differ depending on the installation conditions.
In the event of deviation from the standard configuration, the parameters must be checked after installation!
For detailed information see http://www.ebmpapst.com/general conditions

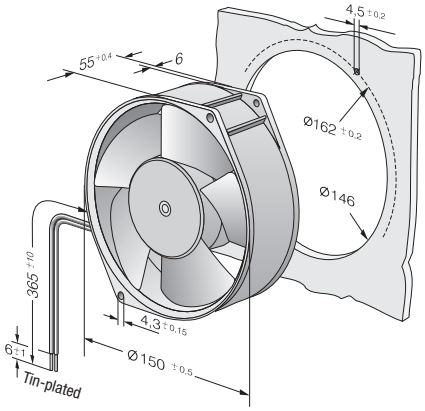

ebmpapst