# DATASHEET - DILMC9-10(110V50HZ,120V60HZ)



Similar to illustration

**Contactor, 3 pole, 380 V 400 V 4 kW, 1 N/O, 110 V 50 Hz, 120 V 60 Hz, AC operation, Spring-loaded terminals**

| | |
|---|---|
| **Part no.** | **DILMC9-10(110V50HZ,120V60HZ)** |
| **Catalog No.** | **277450** |
| **Alternate Catalog No.** | **XTCEC009B10A** |
| **EL-Nummer (Norway)** | **4110303** |

## Delivery program

| | | | |
|---|---|---|---|
| | | | This item can only be ordered until December 31, 2023 with a maximum delivery date of May 31, 2024.<br>Replacement item: DILM9-10(110V50HZ,120V60HZ)-PI (article number: 199230) |
| Product range | | | Contactors |
| Application | | | Contactors for Motors |
| Subrange | | | Contactors up to 170 A, 3 pole |
| Utilization category | | | AC-1: Non-inductive or slightly inductive loads, resistance furnaces<br>AC-3/AC-3e: Normal AC induction motors: Starting, switching off while running<br>AC-4: Normal AC induction motors: starting, plugging, reversing, inching |
| | | | IE3 |
| Notes | | | Also suitable for motors with efficiency class IE3. |
| Connection technique | | | Spring-loaded terminals |
| Number of poles | | | 3 pole |
| **Rated operational current** | | | |
| AC-3 | | | |
| Notes | | | At maximum permissible ambient temperature (open.)<br>Also tested according to AC-3e. |
| 380 V 400 V | $I_e$ | A | 9 |
| AC-1 | | | |
| Conventional free air thermal current, 3 pole, 50 - 60 Hz | | | |
| Open | | | |
| at 40 °C | $I_{th} = I_e$ | A | 22 |
| enclosed | $I_{th}$ | A | 18 |
| Conventional free air thermal current, 1 pole | | | |
| open | $I_{th}$ | A | 50 |
| enclosed | $I_{th}$ | A | 45 |
| **Max. rating for three-phase motors, 50 - 60 Hz** | | | |
| AC-3 | | | |
| 220 V 230 V | P | kW | 2.5 |
| 380 V 400 V | P | kW | 4 |
| 660 V 690 V | P | kW | 4.5 |
| AC-4 | | | |
| 220 V 230 V | P | kW | 1.5 |
| 380 V 400 V | P | kW | 2.5 |
| 660 V 690 V | P | kW | 3.6 |
| **Contacts** | | | |
| N/O = Normally open | | | 1 N/O |
| Contact sequence | | | |
| Can be combined with auxiliary contact | | | DILM32-XHIC…<br>DILA-XHIC(V)… |
| Actuating voltage | | | 110 V 50 Hz, 120 V 60 Hz |
| Voltage AC/DC | | | AC operation |
| Connection to SmartWire-DT | | | no |

| | | | |
|---|---|---|---|
| **Instructions** | | | Contacts to EN 50 012.<br>Auxiliary current, coil, and main current terminals with spring-cage connection technology. |
| Frame size | | | 1 |

# Technical data

## General

| | | | |
|---|---|---|---|
| Standards | | | IEC/EN 60947, VDE 0660, UL, CSA |
| Lifespan, mechanical | | | |
| AC operated | Operations | x $10^6$ | 10 |
| Operating frequency, mechanical | | | |
| AC operated | Operations/h | | 9000 |
| Climatic proofing | | | Damp heat, constant, to IEC 60068-2-78<br>Damp heat, cyclic, to IEC 60068-2-30 |
| Ambient temperature | | | |
| Open | | °C | -25 - +60 |
| Enclosed | | °C | - 25 - 40 |
| Storage | | °C | - 40 - 80 |
| Mounting position | | | 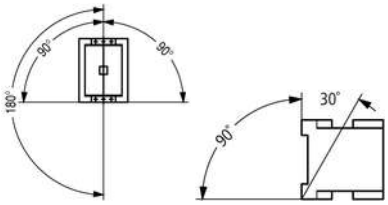 |
| Mechanical shock resistance (IEC/EN 60068-2-27) | | | |
| Half-sinusoidal shock, 10 ms | | | |
| Main contacts | | | |
| N/O contact | | g | 10 |
| Auxiliary contacts | | | |
| N/O contact | | g | 7 |
| N/C contact | | g | 5 |
| Mechanical shock resistance (IEC/EN 60068-2-27) when tabletop-mounted | | | |
| Half-sinusoidal shock, 10 ms | | | |
| Main contacts | | | |
| N/O contact | | g | 5.7 |
| Auxiliary contacts | | | |
| N/O contact | | g | 3.4 |
| N/C contact | | g | 3.4 |
| Degree of Protection | | | IP20 |
| Protection against direct contact when actuated from front (EN 50274) | | | Finger and back-of-hand proof |
| Altitude | | m | Max. 2000 |
| Weight | | | |
| AC operated | | kg | 0.23 |
| Spring-loaded terminal connection | | | |
| Terminal capacity main cable | | | |
| Solid | | $mm^2$ | 1 x (0.75 - 2.5)<br>2 x (0.75 - 2.5) |
| flexible | | $mm^2$ | 1 x (0.75 - 2.5)<br>2 x (0.75 - 2.5) |
| flexible with ferrules | | $mm^2$ | 1 x (0.75 - 1.5)<br>2 x (0.75 - 1.5) |
| Solid or stranded | | AWG | 18 - 14 |
| Stripping length | | mm | 10 |
| Terminal capacity control circuit cables | | | |
| Solid | | $mm^2$ | 1 x (0.75 - 2.5)<br>2 x (0.75 - 2.5) |
| Flexible | | $mm^2$ | 1 x (0.75 - 2.5)<br>2 x (0.75 - 2.5) |
| Flexible with ferrule | | $mm^2$ | 1 x (0.75 - 1.5) |

| | | | |
|---|---|---|---|
| | | | 2 x (0.75 - 1.5) |
| Solid or stranded | | AWG | 18 - 14 |
| Stripping length | | mm | 10 |
| Tool | | | |
| Screwdriver blade width | | mm | 3.5 |
| Push-in terminals | | | |
| Terminal capacity main cable | | | |
| Solid or stranded | | AWG | 18 - 14 |

## Main conducting paths

| | | | |
|---|---|---|---|
| Rated impulse withstand voltage | $U_{imp}$ | V AC | 8000 |
| Overvoltage category/pollution degree | | | III/3 |
| Rated insulation voltage | $U_i$ | V AC | 690 |
| Rated operational voltage | $U_e$ | V AC | 690 |
| Safe isolation to EN 61140 | | | |
| between coil and contacts | | V AC | 400 |
| between the contacts | | V AC | 400 |
| Making capacity (p.f. to IEC/EN 60947) | | | |
| | Up to 690 V | A | 112 |
| Breaking capacity | | | |
| 220 V 230 V | | A | 90 |
| 380 V 400 V | | A | 90 |
| 500 V | | A | 70 |
| 660 V 690 V | | A | 50 |
| Short-circuit rating | | | |
| Short-circuit protection maximum fuse | | | |
| Type “2” coordination | | | |
| 400 V | gG/gL 500 V | A | 20 |
| 690 V | gG/gL 690 V | A | 16 |
| Type “1” coordination | | | |
| 400 V | gG/gL 500 V | A | 35 |
| 690 V | gG/gL 690 V | A | 20 |

## AC

| | | | |
|---|---|---|---|
| AC-1 | | | |
| Rated operational current | | | |
| Conventional free air thermal current, 3 pole, 50 - 60 Hz | | | |
| Open | | | |
| at 40 °C | $I_{th} = I_e$ | A | 22 |
| at 50 °C | $I_{th} = I_e$ | A | 21 |
| at 55 °C | $I_{th} = I_e$ | A | 21 |
| at 60 °C | $I_{th} = I_e$ | A | 20 |
| enclosed | $I_{th}$ | A | 18 |
| Conventional free air thermal current, 1 pole | | | |
| open | $I_{th}$ | A | 50 |
| enclosed | $I_{th}$ | A | 45 |
| AC-3 | | | |
| Rated operational current | | | |
| Open, 3-pole: 50 – 60 Hz | | | |
| Notes | | | At maximum permissible ambient temperature (open.)<br>Also tested according to AC-3e. |
| 220 V 230 V | $I_e$ | A | 9 |
| 240 V | $I_e$ | A | 9 |
| 380 V 400 V | $I_e$ | A | 9 |
| 415 V | $I_e$ | A | 9 |
| 440V | $I_e$ | A | 9 |
| 500 V | $I_e$ | A | 7 |

| | | | |
|---|---|---|---|
| 660 V 690 V | $I_e$ | A | 5 |
| Motor rating | P | kWh | |
| 220 V 230 V | P | kW | 2.5 |
| 240V | P | kW | 3 |
| 380 V 400 V | P | kW | 4 |
| 415 V | P | kW | 5.5 |
| 440 V | P | kW | 5.5 |
| 500 V | P | kW | 4.5 |
| 660 V 690 V | P | kW | 4.5 |
| AC-4 | | | |
| Open, 3-pole: 50 – 60 Hz | | | |
| 220 V 230 V | $I_e$ | A | 6 |
| 240 V | $I_e$ | A | 6 |
| 380 V 400 V | $I_e$ | A | 6 |
| 415 V | $I_e$ | A | 6 |
| 440 V | $I_e$ | A | 6 |
| 500 V | $I_e$ | A | 5 |
| 660 V 690 V | $I_e$ | A | 4.5 |
| Motor rating | P | kWh | |
| 220 V 230 V | P | kW | 1.5 |
| 240 V | P | kW | 1.6 |
| 380 V 400 V | P | kW | 2.5 |
| 415 V | P | kW | 2.8 |
| 440 V | P | kW | 3 |
| 500 V | P | kW | 2.8 |
| 660 V 690 V | P | kW | 3.6 |

## DC

| | | | |
|---|---|---|---|
| Rated operational current, open | | | |
| DC-1 | | | |
| 60 V | $I_e$ | A | 20 |
| 110 V | $I_e$ | A | 20 |
| 220 V | $I_e$ | A | 15 |

## Current heat loss

| | | | |
|---|---|---|---|
| 3 pole, at $I_{th}$ (60°) | | W | 3 |
| Current heat loss at $I_e$ to AC-3/400 V | | W | 0.6 |
| Impedance per pole | | mΩ | 2.5 |

## Magnet systems

| | | | |
|---|---|---|---|
| Voltage tolerance | | | |
| AC operated | Pick-up | x $U_c$ | 0.8 - 1.1 |
| Drop-out voltage AC operated | Drop-out | x $U_c$ | 0.3 - 0.6 |
| Power consumption of the coil in a cold state and 1.0 x $U_S$ | | | |
| 50 Hz | Pick-up | VA | 24 |
| 50 Hz | Sealing | VA | 3.4 |
| 50 Hz | Sealing | W | 1.4 |
| 60 Hz | Pick-up | VA | 30 |
| 60 Hz | Sealing | VA | 4.4 |
| 60 Hz | Sealing | W | 1.4 |
| Duty factor | | % DF | 100 |
| Changeover time at 100 % $U_S$ (recommended value) | | | |
| Main contacts | | | |
| AC operated | | | |
| Closing delay | | ms | 15 - 21 |
| Opening delay | | ms | 9 - 18 |
| Arcing time | | ms | 10 |

## Electromagnetic compatibility (EMC)

| | | |
|---|---|---|
| Emitted interference | | to EN 60947-1 |
| Interference immunity | | to EN 60947-1 |

## Rating data for approved types

| | | |
|---|---|---|
| Switching capacity | | |
| Maximum motor rating | | |
| Three-phase | | |
| 200 V<br>208 V | HP | 3 |
| 230 V<br>240 V | HP | 3 |
| 460 V<br>480 V | HP | 5 |
| 575 V<br>600 V | HP | 7.5 |
| Single-phase | | |
| 115 V<br>120 V | HP | 0.5 |
| 230 V<br>240 V | HP | 1.5 |
| General use | A | 20 |
| Auxiliary contacts | | |
| Pilot Duty | | |
| AC operated | | A600 |
| DC operated | | P300 |
| General Use | | |
| AC | V | 600 |
| AC | A | 10 |
| DC | V | 250 |
| DC | A | 1 |
| Short Circuit Current Rating | SCCR | |
| Basic Rating | | |
| SCCR | kA | 5 |
| max. Fuse | A | 45 |
| max. CB | A | 60 |
| 480 V High Fault | | |
| SCCR (fuse) | kA | 30/100 |
| max. Fuse | A | 25 Class RK5/20 Class J |
| SCCR (CB) | kA | 65 |
| max. CB | A | 16 |
| 600 V High Fault | | |
| SCCR (fuse) | kA | 30/100 |
| max. Fuse | A | 25 Class RK5/20 Class J |
| Special Purpose Ratings | | |
| Electrical Discharge Lamps (Ballast) | | |
| 480V 60Hz 3phase, 277V 60Hz 1phase | A | 18 |
| 600V 60Hz 3phase, 347V 60Hz 1phase | A | 18 |
| Incandescent Lamps (Tungsten) | | |
| 480V 60Hz 3phase, 277V 60Hz 1phase | A | 14 |
| 600V 60Hz 3phase, 347V 60Hz 1phase | A | 14 |
| Resistance Air Heating | | |
| 480V 60Hz 3phase, 277V 60Hz 1phase | A | 18 |
| 600V 60Hz 3phase, 347V 60Hz 1phase | A | 18 |
| Refrigeration Control (CSA only) | | |
| LRA 480V 60Hz 3phase | A | 60 |
| FLA 480V 60Hz 3phase | A | 10 |
| LRA 600V 60Hz 3phase | A | 60 |
| FLA 600V 60Hz 3phase | A | 10 |

| | | | |
|---|---|---|---|
| Definite Purpose Ratings (100,000 cycles acc. to UL 1995) | | | |
| LRA 480V 60Hz 3phase | | A | 54 |
| FLA 480V 60Hz 3phase | | A | 9 |
| Elevator Control | | | |
| 200V 60Hz 3phase | | HP | 2 |
| 200V 60Hz 3phase | | A | 7.8 |
| 240V 60Hz 3phase | | HP | 2 |
| 240V 60Hz 3phase | | A | 6.8 |
| 480V 60Hz 3phase | | HP | 3 |
| 480V 60Hz 3phase | | A | 4.8 |
| 600V 60Hz 3phase | | HP | 5 |
| 600V 60Hz 3phase | | A | 6.1 |

## Design verification as per IEC/EN 61439

| | | | |
|---|---|---|---|
| Technical data for design verification | | | |
| Rated operational current for specified heat dissipation | $I_n$ | A | 9 |
| Heat dissipation per pole, current-dependent | $P_{vid}$ | W | 0.2 |
| Equipment heat dissipation, current-dependent | $P_{vid}$ | W | 0 |
| Static heat dissipation, non-current-dependent | $P_{vs}$ | W | 1.4 |
| Heat dissipation capacity | $P_{diss}$ | W | 0 |
| Operating ambient temperature min. | | °C | -25 |
| Operating ambient temperature max. | | °C | 60 |
| IEC/EN 61439 design verification | | | |
| 10.2 Strength of materials and parts | | | |
| 10.2.2 Corrosion resistance | | | Meets the product standard's requirements. |
| 10.2.3.1 Verification of thermal stability of enclosures | | | Meets the product standard's requirements. |
| 10.2.3.2 Verification of resistance of insulating materials to normal heat | | | Meets the product standard's requirements. |
| 10.2.3.3 Verification of resistance of insulating materials to abnormal heat and fire due to internal electric effects | | | Meets the product standard's requirements. |
| 10.2.4 Resistance to ultra-violet (UV) radiation | | | Meets the product standard's requirements. |
| 10.2.5 Lifting | | | Does not apply, since the entire switchgear needs to be evaluated. |
| 10.2.6 Mechanical impact | | | Does not apply, since the entire switchgear needs to be evaluated. |
| 10.2.7 Inscriptions | | | Meets the product standard's requirements. |
| 10.3 Degree of protection of ASSEMBLIES | | | Does not apply, since the entire switchgear needs to be evaluated. |
| 10.4 Clearances and creepage distances | | | Meets the product standard's requirements. |
| 10.5 Protection against electric shock | | | Does not apply, since the entire switchgear needs to be evaluated. |
| 10.6 Incorporation of switching devices and components | | | Does not apply, since the entire switchgear needs to be evaluated. |
| 10.7 Internal electrical circuits and connections | | | Is the panel builder's responsibility. |
| 10.8 Connections for external conductors | | | Is the panel builder's responsibility. |
| 10.9 Insulation properties | | | |
| 10.9.2 Power-frequency electric strength | | | Is the panel builder's responsibility. |
| 10.9.3 Impulse withstand voltage | | | Is the panel builder's responsibility. |
| 10.9.4 Testing of enclosures made of insulating material | | | Is the panel builder's responsibility. |
| 10.10 Temperature rise | | | The panel builder is responsible for the temperature rise calculation. Eaton will provide heat dissipation data for the devices. |
| 10.11 Short-circuit rating | | | Is the panel builder's responsibility. The specifications for the switchgear must be observed. |
| 10.12 Electromagnetic compatibility | | | Is the panel builder's responsibility. The specifications for the switchgear must be observed. |
| 10.13 Mechanical function | | | The device meets the requirements, provided the information in the instruction leaflet (IL) is observed. |

## Technical data ETIM 8.0

| | | | |
|---|---|---|---|
| Low-voltage industrial components (EG000017) / Power contactor, AC switching (EC000066) | | | |
| Electric engineering, automation, process control engineering / Low-voltage switch technology / Contactor (LV) / Power contactor, AC switching (ecl@ss10.0.1-27-37-10-03 [AAB718015]) | | | |
| Rated control supply voltage Us at AC 50HZ | | V | 110 - 110 |
| Rated control supply voltage Us at AC 60HZ | | V | 120 - 120 |

| | | |
|---|---|---|
| Rated control supply voltage Us at DC | V | 0 - 0 |
| Voltage type for actuating | | AC |
| Rated operation current Ie at AC-1, 400 V | A | 22 |
| Rated operation current Ie at AC-3, 400 V | A | 9 |
| Rated operation power at AC-3, 400 V | kW | 4 |
| Rated operation current Ie at AC-4, 400 V | A | 6 |
| Rated operation power at AC-4, 400 V | kW | 2.5 |
| Rated operation power NEMA | kW | 3.7 |
| Modular version | | No |
| Number of auxiliary contacts as normally open contact | | 1 |
| Number of auxiliary contacts as normally closed contact | | 0 |
| Type of electrical connection of main circuit | | Spring clamp connection |
| Number of normally closed contacts as main contact | | 0 |
| Number of normally open contacts as main contact | | 3 |

## Approvals

| | | |
|---|---|---|
| Product Standards | | IEC/EN 60947-4-1; UL 60947-4-1; CSA - C22.2 No. 60947-4-1-14; CE marking |
| UL File No. | | E29096 |
| UL Category Control No. | | NLDX |
| CSA File No. | | 012528 |
| CSA Class No. | | 2411-03, 3211-04 |
| North America Certification | | UL listed, CSA certified |
| Specially designed for North America | | No |

## Characteristics

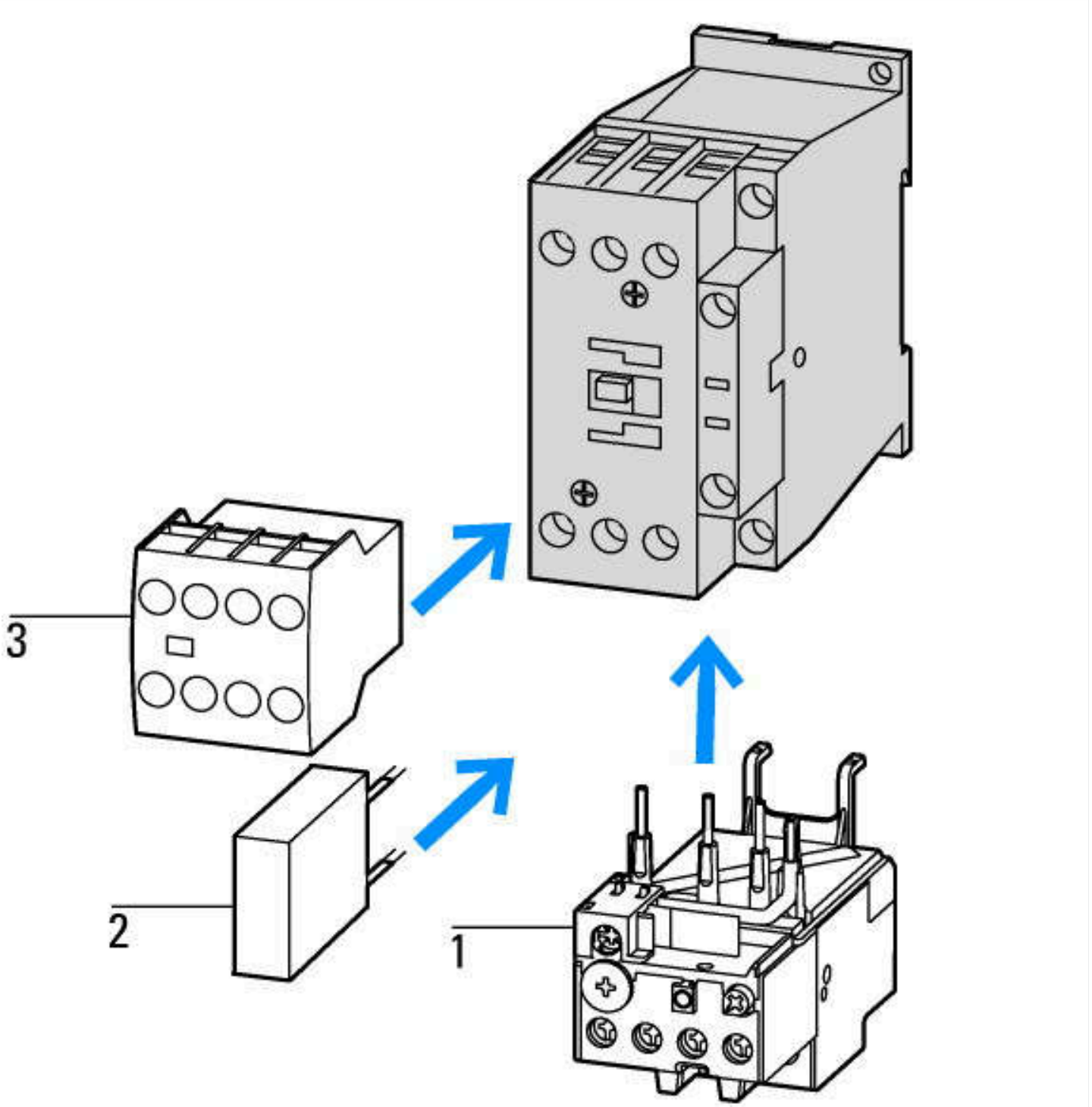


1: Overload relay
2: Suppressor
3: Auxiliary contact modules

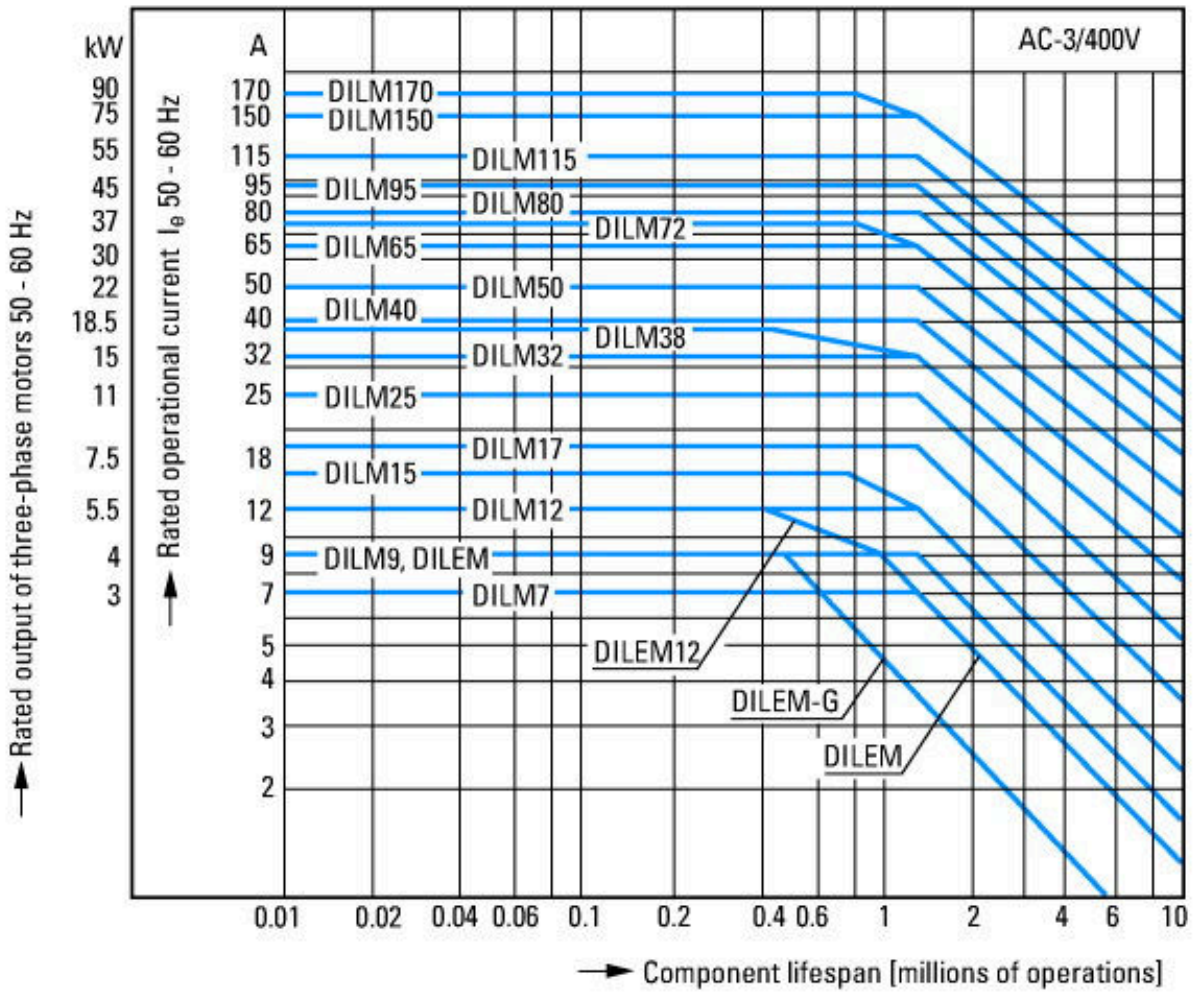


Squirrel-cage motor
Operating characteristics
Starting:from rest
Stopping:after attaining full running speed
Electrical characteristics
Make: up to 6 x rated motor current
Break: up to 1 x rated motor current
Utilization category
100 % AC-3
Typical applications
Compressors
Lifts
Mixers
Pumps
Escalators
Agitators
Fans
Conveyor belts
Centrifuges
Hinged flaps
Bucket-elevators
Air conditioning system
General drives in manufacturing and processing machines

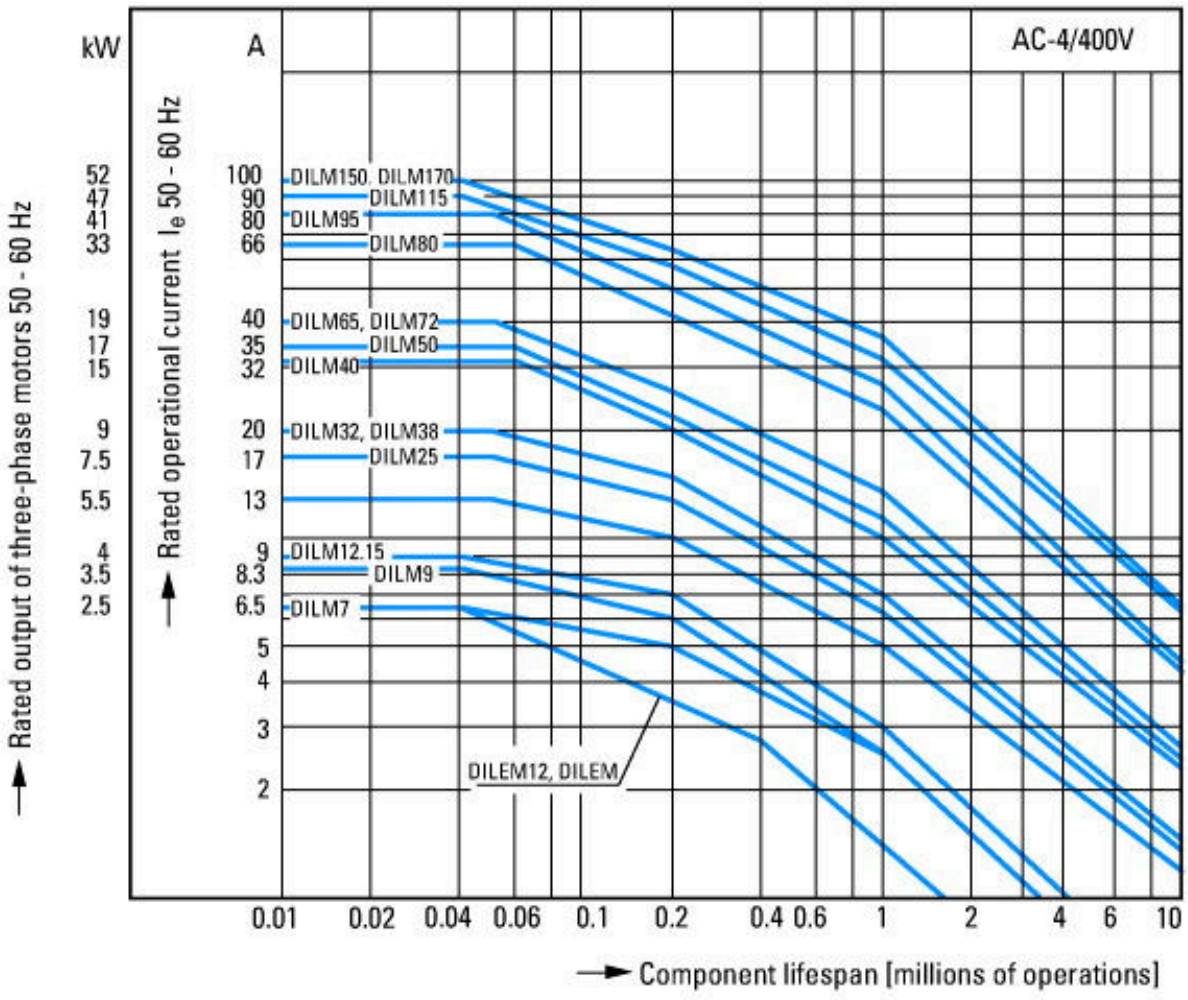


Extreme switching duty
Squirrel-cage motor
Operating characteristics
Inching, plugging, reversing
Electrical characteristics
Make: up to 6 x rated motor current
Break: up to 6 x rated motor current
Utilization category
100 % AC-4
Typical applications
Printing presses
Wire-drawing machines
Centrifuges
Special drives for manufacturing and processing machines

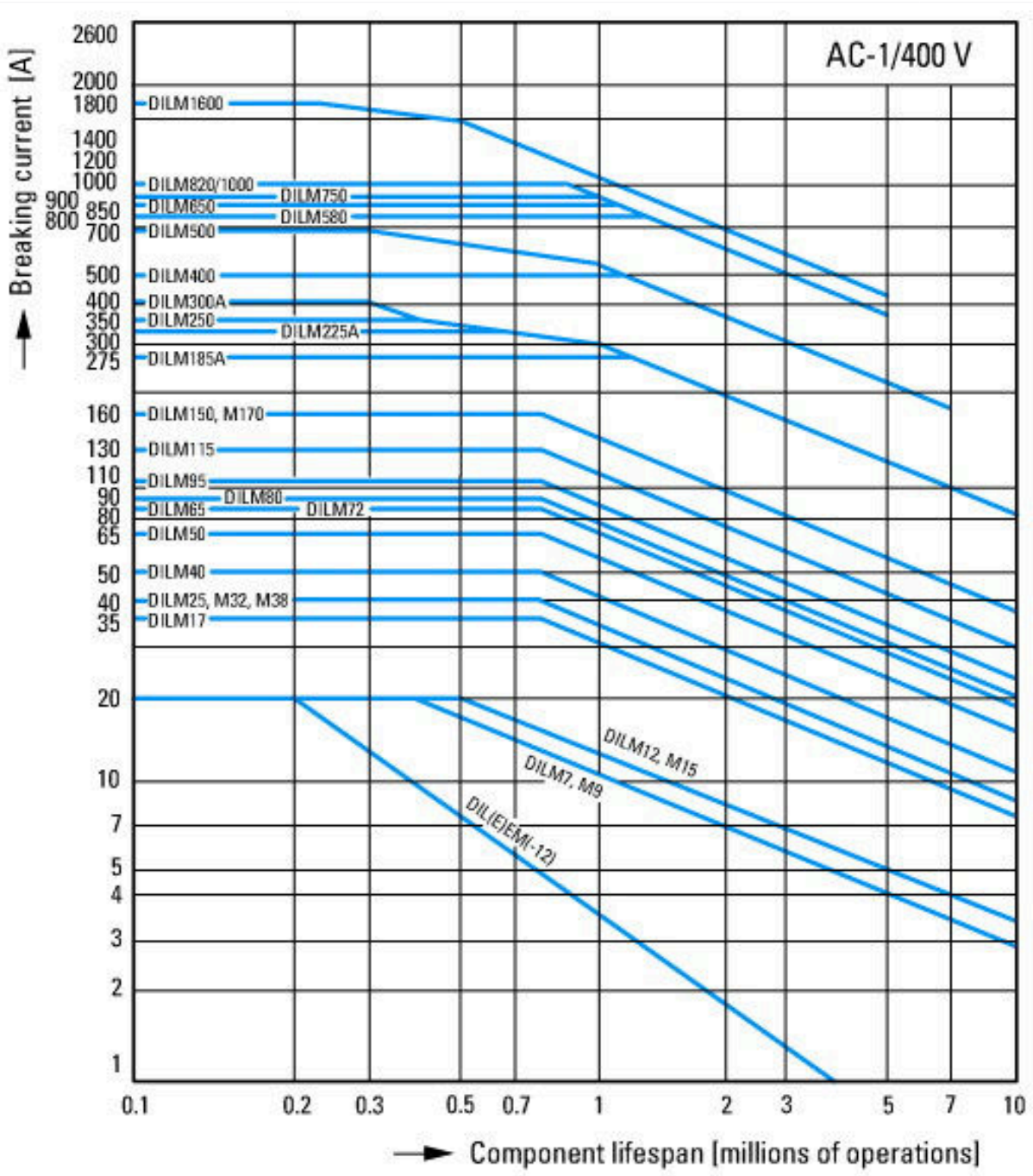


Switching conditions for non-motor consumers, 3 pole, 4 pole
Operating characteristics
Non inductive and slightly inductive loads
Electrical characteristics
Switch on: 1 x rated operational current
Switch off: 1 x rated operational current
Utilization category
100 % AC-1
Typical examples of application
Electric heat

## Dimensions

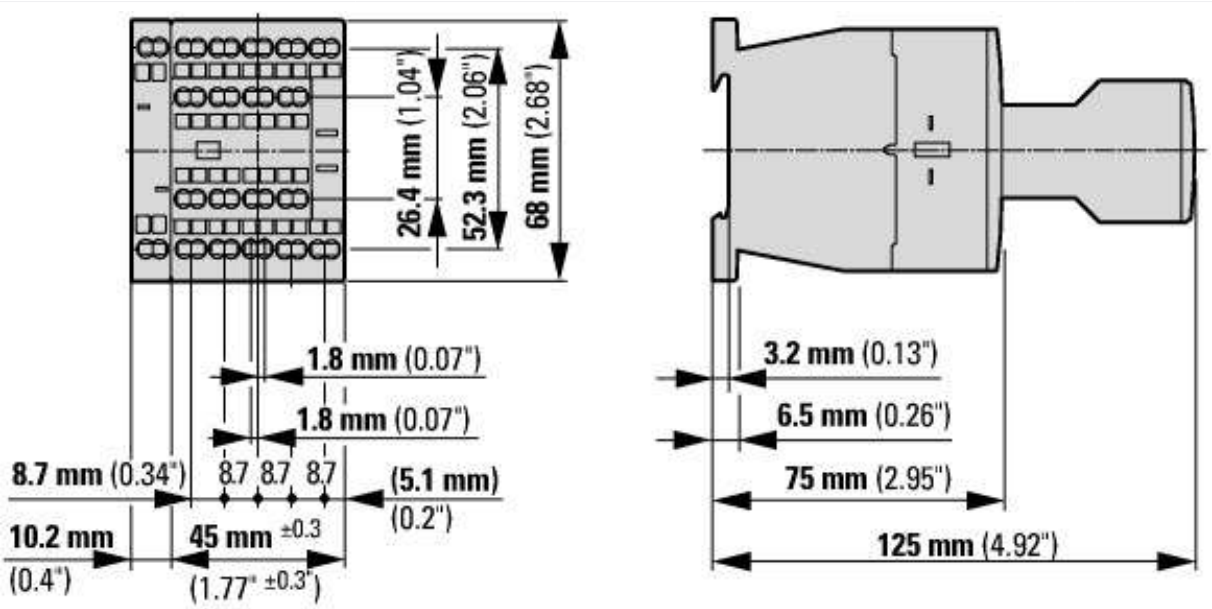


Contactor with auxiliary contact module

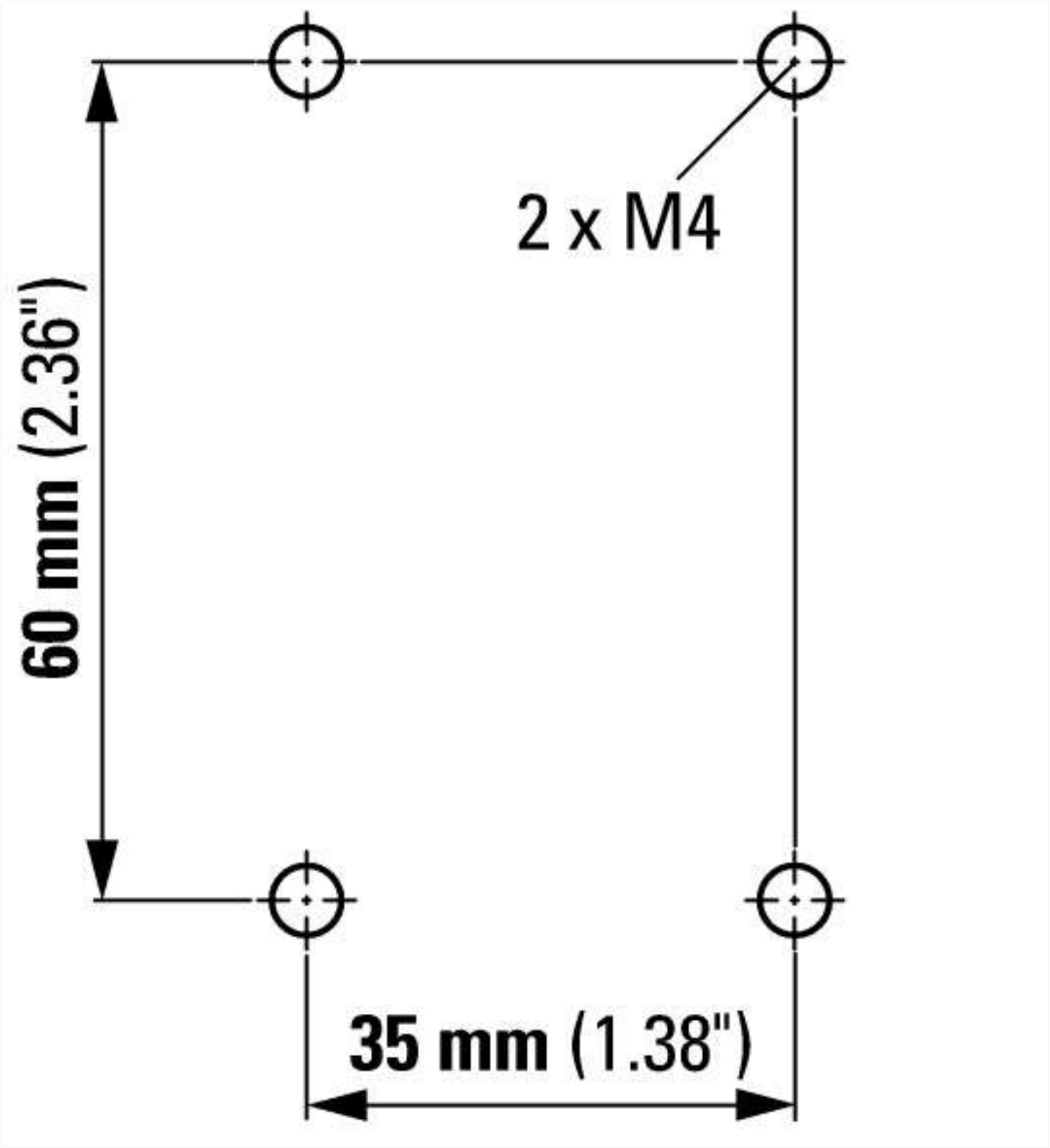


## Additional product information (links)

| **IL03407013Z (AWA2100-2126) Contactors** | |
|---|---|
| IL03407013Z (AWA2100-2126) Contactors | https://es-assets.eaton.com/DOCUMENTATION/AWA_INSTRUCTIONS/IL03407013Z.pdf |
| Motor starters and "Special Purpose Ratings" for the North American market | http://www.eaton.eu/ecm/groups/public/@pub/@europe/@electrical/documents/content/pct_3258146.pdf |
| Switchgear of Power Factor Correction Systems | http://www.moeller.net/binary/ver_techpapers/ver934en.pdf |
| X-Start - Modern Switching Installations Efficiently Fitted and Wired Securely | http://www.moeller.net/binary/ver_techpapers/ver938en.pdf |
| Mirror Contacts for Highly-Reliable Information Relating to Safety-Related Control Functions | http://www.moeller.net/binary/ver_techpapers/ver944en.pdf |
| Effect of the Cabel Capacitance of Long Control Cables on the Actuation of Contactors | http://www.moeller.net/binary/ver_techpapers/ver949en.pdf |
| Switchgear for Luminaires | http://www.moeller.net/binary/ver_techpapers/ver955en.pdf |

| | |
|---|---|
| Standard Compliant and Functionally Safe Engineering Design with Mechanical Auxiliary Contacts | http://www.moeller.net/binary/ver_techpapers/ver956en.pdf |
| The Interaction of Contactors with PLCs | http://www.moeller.net/binary/ver_techpapers/ver957en.pdf |
| Busbar Component Adapters for modern Industrial control panels | http://www.moeller.net/binary/ver_techpapers/ver960en.pdf |


© 07/2022 by Eaton Industries GmbH