PR electronics



5115

Signal calculator

Nr. 5115V104-UK
From ser. no. 000395001

DK ▶ PR electronics A/S tilbyder et bredt program af analoge og digitale signalbehandlingsmoduler til industriel automation. Programmet består af Isolatorer, Displays, Ex-barrierer, Temperaturtransmittere, Universaltransmittere mfl. Vi har modulerne, du kan stole på i selv barske miljøer med elektrisk støj, vibrationer og temperaturudsving, og alle produkter opfylder de strengeste internationale standarder. Vores motto »Signals the Best« er indbegrebet af denne filosofi – og din garanti for kvalitet.

UK ▶ PR electronics A/S offers a wide range of analogue and digital signal conditioning devices for industrial automation. The product range includes Isolators, Displays, Ex Interfaces, Temperature Transmitters, and Universal Devices. You can trust our products in the most extreme environments with electrical noise, vibrations and temperature fluctuations, and all products comply with the most exacting international standards. »Signals the Best« is the epitome of our philosophy – and your guarantee for quality.

FR ▶ PR electronics A/S offre une large gamme de produits pour le traitement des signaux analogiques et numériques dans tous les domaines industriels. La gamme de produits s'étend des transmetteurs de température aux afficheurs, des isolateurs aux interfaces SI, jusqu'aux modules universels. Vous pouvez compter sur nos produits même dans les conditions d'utilisation sévères, p.ex. bruit électrique, vibrations et fluctuations de température. Tous nos produits sont conformes aux normes internationales les plus strictes. Notre devise »SIGNALS the BEST« c'est notre ligne de conduite - et pour vous l'assurance de la meilleure qualité.

DE ▶ PR electronics A/S verfügt über ein breites Produktprogramm an analogen und digitalen Signalverarbeitungsmodule für die industrielle Automatisierung. Dieses Programm umfasst Displays, Temperaturtransmitter, Ex- und galvanische Signaltrenner, und Universalgeräte. Sie können unsere Geräte auch unter extremen Einsatzbedingungen wie elektrisches Rauschen, Erschütterungen und Temperaturschwingungen vertrauen, und alle Produkte von PR electronics werden in Übereinstimmung mit den strengsten internationalen Normen produziert. »Signals the Best« ist Ihre Garantie für Qualität!

SIGNAL CALCULATOR

PRETRANS 5115

CONTENTS

Warning 2
Symbol identification 3
Safety instructions 3
How to demount system 5000 5
Application 6
Technical characteristics 6
Mounting / installation 6
Applications 7
Order: 5115 8
Electrical specifications 8
Connections 13
Block diagram 16
Selection of input type (5115A) 17
5115 connection to Loop Link 17
Function description 18



GENERAL

WARNING

This device is designed for connection to hazardous electric voltages.
Ignoring this warning can result in severe personal injury or mechanical damage.
To avoid the risk of electric shock and fire, the safety instructions of this manual must be observed and the guidelines followed.
The specifications must not be exceeded, and the device must only be applied as described in the following.
Prior to the commissioning of the device, this manual must be examined carefully.
Only qualified personnel (technicians) should install this device. If the equipment is used in a manner not specified by the manufacturer, the protection provided by the equipment may be impaired.



HAZARD-OUS VOLTAGE



WARNING

Until the device is fixed, do not connect hazardous voltages to the device.
The following operations should only be carried out on a disconnected device and under ESD safe conditions:

- Dismantlement of the device for setting of DIP-switches and jumpers.
- General mounting, connection and disconnection of wires.
- Troubleshooting the device.

Repair of the device and replacement of circuit breakers must be done by PR electronics A/S only.



INSTAL-LATION

WARNING

SYSTEM 5000 must be mounted on DIN rail according to DIN 46277.
The communication connector of SYSTEM 5000 is connected to the input terminals on which dangerous voltages can occur, and it must only be connected to the programming unit Loop Link by way of the enclosed cable.

SYMBOL IDENTIFICATION



Triangle with an exclamation mark: Warning / demand. Potentially lethal situations.



The CE mark proves the compliance of the device with the essential requirements of the directives.



The double insulation symbol shows that the device is protected by double or reinforced insulation.



Ex devices have been approved for use in connection with installations in explosive areas.

SAFETY INSTRUCTIONS

DEFINITIONS

Hazardous voltages have been defined as the ranges: 75 to 1500 Volt DC, and 50 to 1000 Volt AC.
Technicians are qualified persons educated or trained to mount, operate, and also troubleshoot technically correct and in accordance with safety regulations.
Operators, being familiar with the contents of this manual, adjust and operate the knobs or potentiometers during normal operation.

RECEIPT AND UNPACKING

Unpack the module without damaging it. The packing should always follow the module until this has been permanently mounted. Check at the receipt of the module whether the type corresponds to the one ordered.

ENVIRONMENT

Avoid direct sunlight, dust, high temperatures, mechanical vibrations and shock, as well as rain and heavy moisture. If necessary, heating in excess of the stated limits for ambient temperatures should be avoided by way of ventilation.
All devices fall under Installation Category II, Pollution Degree 1, and Insulation Class II.

MOUNTING

Only technicians who are familiar with the technical terms, warnings, and instructions in the manual and who are able to follow these should connect the device. Should there be any doubt as to the correct handling of the device, please contact your local distributor or, alternatively,

PR electronics A/S
www.prelectronics.com

Mounting and connection of the device should comply with national legislation for mounting of electric materials, i.e. wire cross section, protective fuse, and location. Descriptions of input / output and supply connections are shown in the block diagram and side label.

The following apply to fixed hazardous voltages-connected devices:

The max. size of the protective fuse is 10 A and, together with a power switch, it should be easily accessible and close to the device. The power switch should be marked with a label telling it will switch off the voltage to the device.

Year of manufacture can be taken from the first two digits in the serial number.

CALIBRATION AND ADJUSTMENT

During calibration and adjustment, the measuring and connection of external voltages must be carried out according to the specifications of this manual. The technician must use tools and instruments that are safe to use.

NORMAL OPERATION

Operators are only allowed to adjust and operate devices that are safely fixed in panels, etc., thus avoiding the danger of personal injury and damage. This means there is no electrical shock hazard, and the device is easily accessible.

CLEANING

When disconnected, the device may be cleaned with a cloth moistened with distilled water.

LIABILITY

To the extent that the instructions in this manual are not strictly observed, the customer cannot advance a demand against PR electronics A/S that would otherwise exist according to the concluded sales agreement.

HOW TO DEMOUNT SYSTEM 5000

First, remember to demount the connectors with hazardous voltages.

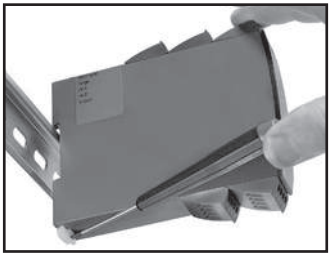

Picture 1:
Detach the device from the DIN rail by lifting the bottom lock.

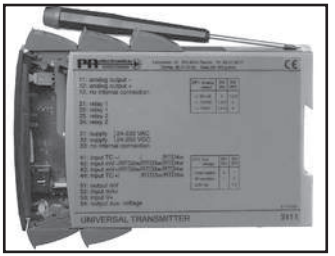

Picture 2:
By lifting the upper lock and pulling the front plate simultaneously the PCB can be removed
Switches and jumpers can now be adjusted.

SIGNAL CALCULATOR
PRETRANS 5115

- *Redundancy measurement with 2 input signals*
- *Signal calculator with four arithmetical operations*
- *Duplication of the input signal*
- *Input for RTD, Ohm, TC, mV, mA, and V*
- *Universal AC or DC supply*

Application

- Redundancy measurement of temperature by means of two sensors, where the secondary sensor takes over the measurement when a sensor error occurs on the primary sensor.
- Duplication of the input signal, e.g. from a temperature sensor or an analogue process signal to two separate analogue outputs.
- Signal calculator with the four arithmetical operations: addition, subtraction, multiplication and division.
- Example: Differential measurement: (Input 1 * K1) - (Input 2 * K2) + K4
- Example: Average measurement: (Input 1 * 0.5) + (Input 2 * 0.5) + K4
- Example: Different functions on the outputs: Output 1 = input 1 - input 2, and Output 2 = input 1 + input 2

Technical characteristics

- Within a few seconds the user can program PR5115 to a selected application using the configuration program PReset.
- A green front LED that indicates normal operation, sensor error on each sensor, and functional error.
- Continuous check of vital stored data for safety reasons.
- 5-port 3.75 kVAC galvanic isolation.

Mounting / installation

- Mounted vertically or horizontally on a DIN rail. As the devices can be mounted without any distance between neighbouring units, up to 42 devices can be mounted per metre.

APPLICATIONS

Redundancy measurement

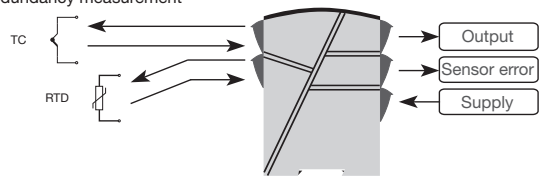

1 sensor

2 outputs

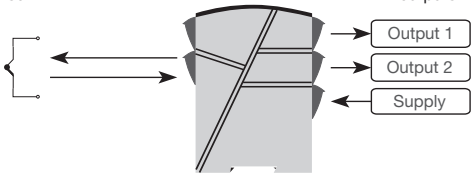

2 signals of 4...20 mA

Arithmetical operations:
A + B, A - B,
A • B, and A / B

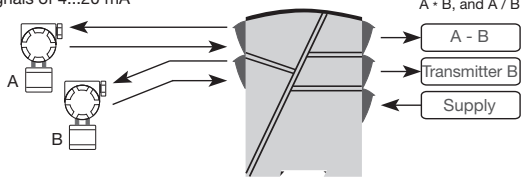

1 signal of 4...20 mA

2 outputs

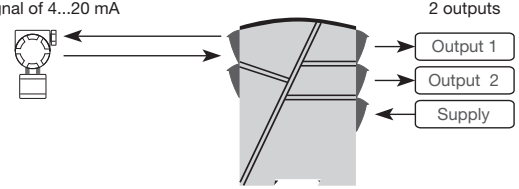

Order: 5115 _ _

Type	Version		Input	
5115	Standard	: A	RTD / TC / mV / R / mA / V	: _
	ATEX Ex	: B	RTD / TC / mV / R	: 1
			mA / V / mV	: 2
			Input 1, RTD / TC / mV / R Input 2, mA / V / mV	: 3

***NB!** Please remember to order CJC connectors type 5910Ex (input 1) and 5913Ex (input 2) for TC inputs with an internal CJC.

Electrical specifications

Specifications range:
-20°C til +60°C

Common specifications:

Supply voltage, universal	21.6...253 VAC 50...60 Hz 19.2...300 VDC
Internal consumption	≤ 2 W
Max. consumption	≤ 3 W
Fuse	400 mA SB / 250 VAC
Isolation voltage, test / operation	3.75 kVAC / 250 VAC
Communications interface	Loop Link
Signal / noise ratio	Min. 60 dB (0...100 kHz)
Redundancy switch-over time	≤ 400 ms
Updating time:	
Temperature input	115 ms
mA / V / mV input	75 ms
Response time (0...90%, 100...10%), programmable:	
Temperature input	400 ms...60 s
mA / V / mV input	250 ms...60 s
Signal dynamics, input	22 bit
Signal dynamics, output	16 bit
Calibration temperature	20...28°C

Accuracy, the greater of general and basic values:

General values		
Input type	Absolute accuracy	Temperature coefficient
All	≤ ±0.05% of span	≤ ±0.01% of span / °C

Basic values		
Input type	Basic accuracy	Temperature coefficient
mA	≤ ±4 µA	≤ ±0.4 µA / °C
Volt	≤ ±10 µV	≤ ±1 µV / °C
RTD	≤ ±0.2°C	≤ ±0.01°C / °C
Lin. resistance	≤ ±0.1 Ω	≤ ±10 mΩ / °C
TC type: E, J, K, L, N, T, U	≤ ±1°C	≤ ±0.05°C / °C
TC type: B, R, S, W3, W5, LR	≤ ±2°C	≤ ±0.2°C / °C

EMC immunity influence ..... < ±0.5% of span
Extended EMC immunity:
NAMUR NE 21, A criterion, burst ..... < ±1% of span

Auxiliary supplies:
Reference voltage ..... 2.5 VDC ±0.5% / 15 mA
2-wire supply (pin 44...42 and 54...52) ..... 28...17.1 VDC / 0...20 mA
Max. wire size ..... 1 x 2.5 mm^2 stranded wire
Screw terminal torque ..... 0.5 Nm
Relative humidity ..... < 95% RH (non-cond.)
Dimensions (HxWxD) ..... 109 x 23.5 x 130 mm
Protection degree IP20
Weight ..... 225 g

Electrical specifications - temperature input:

Max. offset ..... 50% of selec. max. value

TC input:

Type	Min. temperature	Max. temperature	Min. span	Standard
B	+400°C	+1820°C	200°C	IEC584
E	-100°C	+1000°C	50°C	IEC584
J	-100°C	+1200°C	50°C	IEC584
K	-180°C	+1372°C	50°C	IEC584
L	-100°C	+900°C	50°C	DIN 43710
N	-180°C	+1300°C	100°C	IEC584
R	-50°C	+1760°C	200°C	IEC584
S	-50°C	+1760°C	200°C	IEC584
T	-200°C	+400°C	50°C	IEC584
U	-200°C	+600°C	75°C	DIN 43710
W3	0°C	+2300°C	200°C	ASTM E988-90
W5	0°C	+2300°C	200°C	ASTM E988-90
LR	-200°C	+800°C	50°C	GOST 3044-84

Sensor error current..... Nom. 30 µA

Cold junction compensation ..... < ±1°C

mV input:

Measurement range..... -150...+150 mV

Min. measurement range..... 5 mV

Max. offset ..... 50% of selec. max. value

Input resistance..... Nom. 10 MΩ

RTD and linear resistance input:

Type	Min. value	Max. value	Min. span	Standard
Pt100	-200°C	+850°C	25°C	IEC 751
Ni100	-60°C	+250°C	25°C	DIN 43760
Lin. R	0 Ω	5000 Ω	30 Ω	-------

Max. cable resistance per wire..... 10 Ω

Sensor current..... Nom. 0.2 mA

Effect of sensor cable resistance

(3- / 4-wire)..... < 0.002 Ω / Ω

Sensor error detection..... Yes

Electrical specifications, mA / V / mV input:

Max. offset ..... 50% of selec. max. value

Current input:

Measurement range	0...100 mA
Min. measurement range (span)	4 mA
Input resistance:	
Supplied unit	Nom. 10 Ω + PTC 10 Ω
Non-supplied unit	R_{SHUNT} = ∞, V_{DROP} < 6 V

Voltage input:

Measurement range	0...250 VDC
Min. measurement range (span)	5 mVDC
Max. offset	50% of selec. max. value
Input resistance ≤ 2.5 VDC	Nom. 10 MΩ
> 2.5 VDC	Nom. 5 MΩ

Electrical specifications - OUTPUT:

Current output:

Signal range (span)	0...20 mA
Min. signal range (span)	10 mA
Load (max.)	20 mA / 600 Ω / 12 VDC
Load stability	≤ 0.01% of span / 100 Ω
Current limit	≤ 28 mA

Voltage output:

Signal range (span)	0...10 VDC
Min. signal range (span)	500 mV
Load (min.)	500 kΩ

2-wire 4...20 mA output:

Signal range	4...20 mA
Load stability	≤ 0.01% of span / 100 Ω
Load resistance	≤ (V_{supply} -3.5) / 0.023 A [Ω]
Max. external 2-wire supply	29 VDC
Effect of external 2-wire supply voltage change	< 0.005% of span / V

Sensor error detection:

Programmable	0...23 mA
NAMUR NE43 Upscale	23 mA
NAMUR NE43 Downscale	3.5 mA

EEx / I.S. approval (5115B):

DEMKO 00ATEX128567	⟨Ex⟩ II (1) GD [EEx ia] IIC
Applicable in zone	0, 1, 2, 20, 21 or 22

Ex / I.S. data for 5115B, all types:

Terminal 31, 32 and 33

U_m ..... : 250 V

Ex / I.S data for 5115 B1 (input 1 for 5115 B3):

Terminal 41, 42, 44 to 43 (51, 52, 54 to 53)

U_o ..... : 7.5 VDC

I_o ..... : 6.0 mADC

P_o ..... : 11.25 mW

L_o ..... : 200 mH

C_o ..... : 6.0 µF

Ex / I.S data for 5115 B2 (input 2 for 5115 B3):

Terminal 44 to 41 (54 to 51)

U_o ..... : 28 VDC

I_o ..... : 87 mADC

P_o ..... : 0.62 W

L_o ..... : 4.2 mH

C_o ..... : 0.08 µF

Terminal 42, 43 to 41 (52, 53 to 51)

U_o ..... : 7.5 VDC

I_o ..... : 6.0 mADC

P_o ..... : 11.25 mW

L_o ..... : 200 mH

C_o ..... : 6.0 µF

Marine approval:

Det Norske Veritas, Ships & Offshore ..... Standard for Certification No. 2.4

GOST R approval:

VNIIM & VNIIFTRI, Cert. No..... See www.prelectronics.com

Observed authority requirements:	**Standard:**
EMC 2004/108/EC	EN 61326-1
LVD 2006/95/EC.....	EN 61010-1
PELV/SELV	IEC 364-4-41, and EN 60742
ATEX 94/9/EC.....	EN 50014, EN 50020 and EN 50281-1-1

Of span = of the presently selected range

CONNECTIONS

Supply:

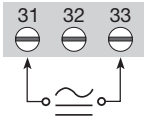

Inputs:

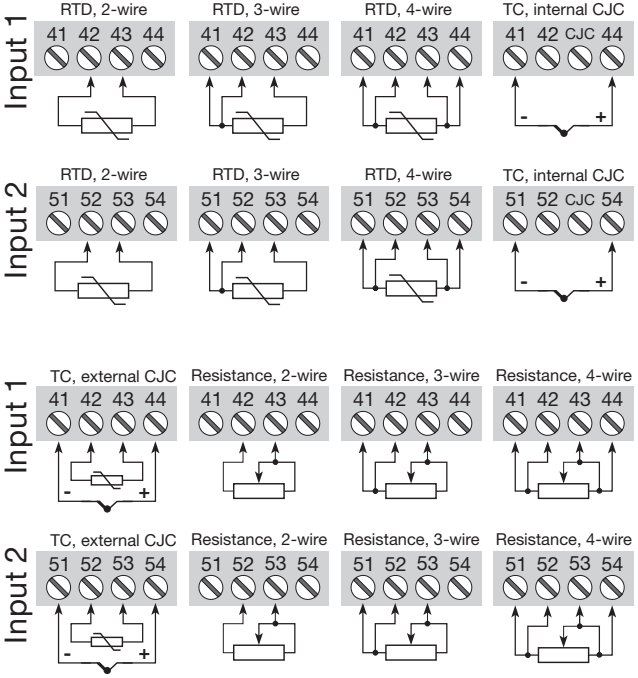

CONNECTIONS

Inputs:

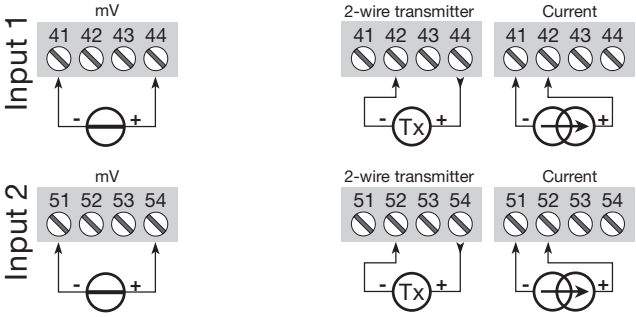

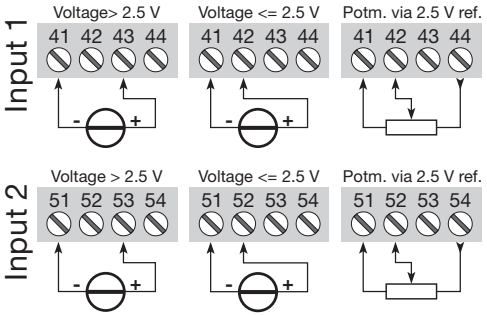

CONNECTIONS

Outputs:

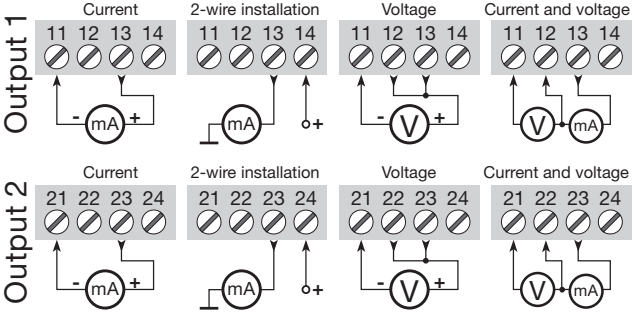

BLOCK DIAGRAM

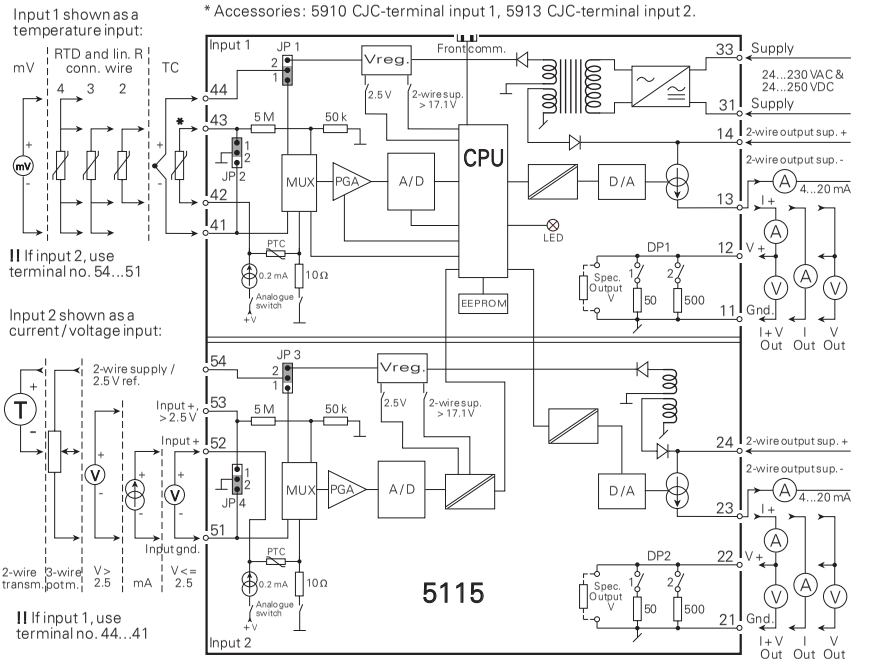

SELECTION OF INPUT TYPE (5115A)

Input	JP 1	JP 2	JP 3	JP 4
Temperature input 1 Temperature input 2	1 -	1 -	- 1	- 1
Current / voltage input 1 Current / voltage input 2	2 -	2 -	- 2	- 2

5115 CONNECTION TO LOOP LINK

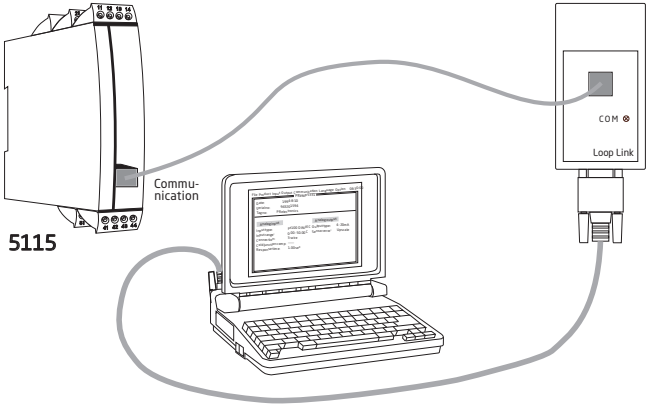

FUNCTION DESCRIPTION

In general:

Output 1 and output 2 can be configured for standard current / voltage signals in the ranges 0/4...20 mA and 0...10 VDC. When selecting the arithmetical functions, up to 4 constants, K1, K2, K3, and K4, must also be defined.
The functions can be selected individually for both outputs. Duplication of the signal from e.g. input 1 is obtained by selecting the function **Input 1** for both output 1 and output 2.

Selection of functions for the outputs (to be selected in the configuration program PReset):

Input 1:

Input 1 is transmitted directly to the selected output.

Input 2:

Input 2 is transmitted directly to the selected output.

Addition: (Input 1 * K1 + Input 2 * K2 + K4)

After calculation, the result of the addition is transmitted to the selected output.

Example 1:

When adding 2 identically scaled input signals of e.g. 4...20 mA, the output would be 8...40 mA at the same scaling. But as the output follows standard current signals of 0/4...20 mA, the scaling on the output is double of the scaling on the inputs. This means that each input must be scaled by only half the scale of the output. This is done by setting K1 and K2 at 0.5.
The offset constant K4 will typically be 0.

Example 2:

When adding 2 differently scaled input signals, K1 and K2 can be calculated as follows:
Input 1: 4...20 mA corresponding to a flow of 0...100 m3 / h.
Input 2: 4...20 mA corresponding to a flow of 0...150 m3 / h.
The output signal of 4...20 mA must correspond to a flow of 0...250 m3 / h.
Input 1 must be scaled by 100/250 corresponding to a K1 of 0.4.
Input 2 must be scaled by 150/250 corresponding to a K2 of 0.6.
The offset constant K4 will typically be 0.

Subtraction: (Input 1 * K1 - Input 2 * K2 + K4)

After calculation, the result of the subtraction is transmitted to the selected output.

Input 1 must be the highest signal, or the offset constant K4 must be of sufficient value to ensure that the output is not negative.

Example:

When subtracting 2 identically scaled signals, the constants K1 and K2 = 1 and the offset constant K4 = 0.

If K1, K2, and K4 = 0.5, the output will be 50% by identical signals on the inputs. If input 1 receives a 100% signal and input 2 receives a 0% signal, the output will be 100%. If input 2 receives a 100% signal and input 1 receives a 0% signal, the output will be 0%.

Subtraction: (Input 2 * K2 - Input 1 * K1 + K4)

Input 2 must be the highest signal. For further details see Subtraction: (Input 1 * K1 - Input 2 * K2 + K4).

Multiplication: ((Input 1 + K1) * (Input 2 + K2) * K3 + K4)

After calculation, the result of the multiplication is transmitted to the selected output.

The offset constants K1 and K2 are used as additions on the inputs. The constant K3 is multiplied on the result and the offset constant K4 is added to the outputs.

Example:

By means of a potentiometer via the 2.5 V reference voltage on input 1, the signal on input 2 can be variable by a factor of 0.75...1.25.

Configuration of input 1:

When the potentiometer is at zero, the result of (Input 1 + K1) * K3 must be 0.75 and when the potentiometer is in the top position, the result of (Input 1 + K1) * K3 must be 1.25. By solving the following two equations with 2 unknowns, K1 and K3 can be found:

Equation 1: (0 + K1) * K3 = 0.75

Equation 2: (1 + K1) * K3 = 1.25

Solution: K1 = 1.5 and K3 = 0.5

Configuration of input 2:

As the signal on input 2 must be scaled by its real value, K2 must be 0.

Configuration of K4:

In the above example, there is no offset on the output, K4 is thus set to 0.

Division: $\left(\frac{\text{Input 1 + K1}}{\text{Input 2 + K2}} * \text{K3 + K4}\right)$

After calculation, the result of the division is transmitted to the selected output.

The constants K1, K2, K3, and K4 are configured in the same way as described under multiplication.

Division: $\left(\frac{\text{Input 2 + K2}}{\text{Input 1 + K1}} * \text{K3 + K4}\right)$

After calculation, the result of the division is transmitted to the selected output.

The constants K1, K2, K3, and K4 are configured in the same way as described under multiplication.

Redundancy: (Primary input 1 —> Secondary input 2 * K2 + K4)

The redundancy function transmits the primary signal from input 1 to the selected output. By sensor error on input 1, the output automatically changes to the secondary signal from input 2.

If the signals on input 1 and input 2 are identically scaled, K2 = 1 and K4 = 0.

Sensor error detection can be selected acc. to requirement, but if "off" mode is selected, the output is undefined in case of sensor error on both inputs.

Maximum safety is obtained by using output 2 for sensor error detection. This can be done by selecting [Output] as [Fixed] and selecting [Sensor error action] and [Detect] on output 2 acc. to requirement.

Redundancy: (Primary input 2 —> Secondary input 1 * K1 + K4)

See the above description of "redundancy" for further details.

Green LED function:

The green front LED indicates the following states:

Normal operation, i.e. no errors:	the LED flashes quickly.
Functional error:	the LED lights constantly.
Sensor error on input 1:	the LED flashes once per second.
Sensor error on input 2:	the LED flashes twice per second.
Sensor error both inputs	the LED lights constantly.

Displays Programmable displays with a wide selection of inputs and outputs for display of temperature, volume and weight, etc. Feature linearisation, scaling, and difference measurement functions for programming via PReset software.

Ex interfaces Interfaces for analogue and digital signals as well as HART® signals between sensors / I/P converters / frequency signals and control systems in Ex zone 0, 1 & 2 and for some devices in zone 20, 21 & 22.

Isolation Galvanic isolators for analogue and digital signals as well as HART® signals. A wide product range with both loop-powered and universal isolators featuring linearisation, inversion, and scaling of output signals.

Temperature A wide selection of transmitters for DIN form B mounting and DIN rail devices with analogue and digital bus communication ranging from application-specific to universal transmitters.

Universal PC or front programmable devices with universal options for input, output and supply. This range offers a number of advanced features such as process calibration, linearisation and auto-diagnosis.



www.prelectronics.fr
sales@prelectronics.fr

www.prelectronics.de
sales@prelectronics.de

www.prelectronics.es
sales@prelectronics.es

www.prelectronics.it
sales@prelectronics.it

www.prelectronics.se
sales@prelectronics.se

www.prelectronics.co.uk
sales@prelectronics.co.uk

www.prelectronics.com
sales@prelectronics.com

www.prelectronics.cn
sales@prelectronics.cn

Head office

Denmark	www.prelectronics.com
PR electronics A/S	sales@prelectronics.dk
Lerbakken 10	tel. +45 86 37 26 77
DK-8410 Rønde	fax +45 86 37 30 85

DS CERTIFIED
QUALITY SYSTEM AND ENVIRONMENTAL MANAGEMENT SYSTEM
DS/EN ISO 9001
DS/EN ISO 14001
DANAK