213759
SBT-MF-M30
Assembly flange

- Simple assembly of the SBT-x, by screwing in



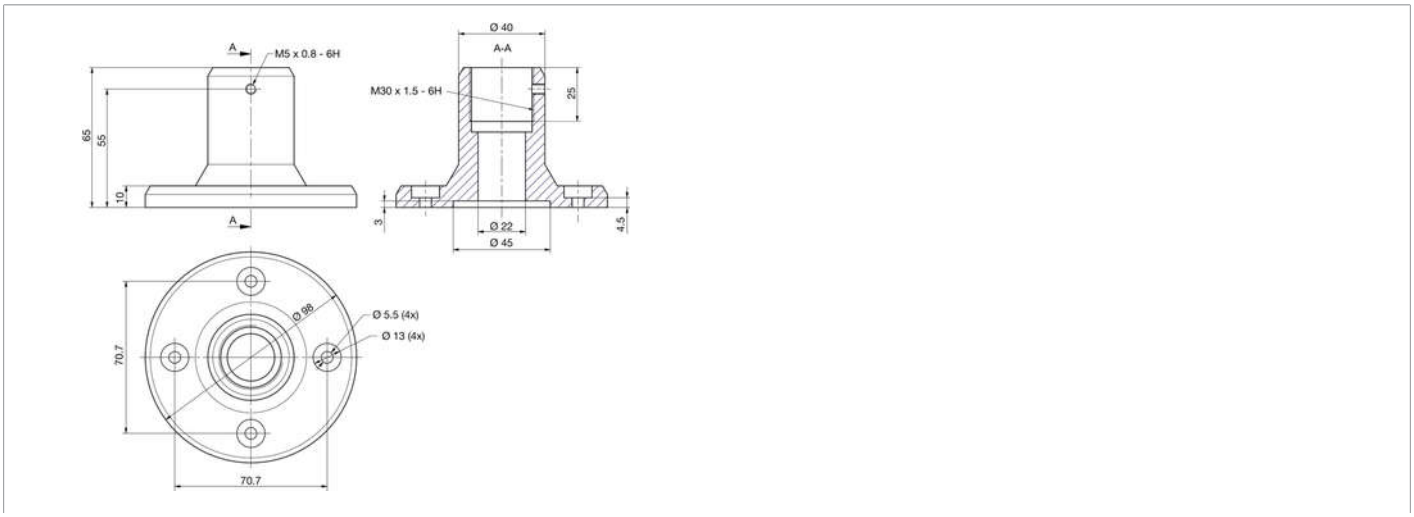

Technical data (typ.)	
Housing dimensions	D 98 x 65 mm
Housing material	Aluminum
Component	Assembly flange
Design	Cylinder
To be used for	SBX-xxx
Scope of delivery	Assembly flange (1x)

More information / accessories	https://www.di-soric.com/213759

© di-soric . Right to change reserved